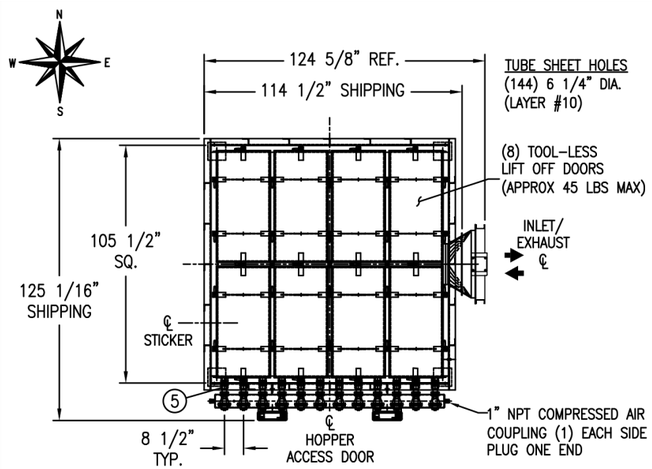

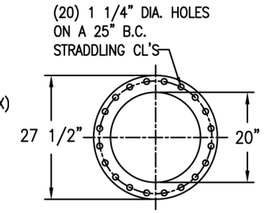

EXHAUST FLANGE DETAIL
1/4" THICK
SCALE: 2X

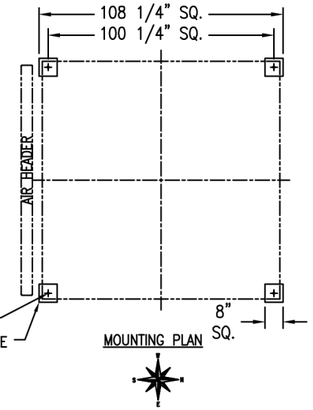

MOUNTING PLAN

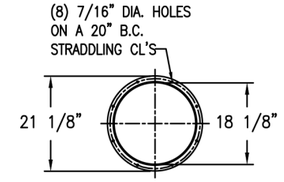

INLET FLANGE DETAIL
PURCHASED – MIDWEST
SCALE: 2X

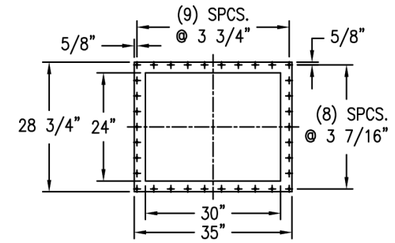

DISCHARGE FLANGE DETAIL
3/8" THICK
SCALE: 2X

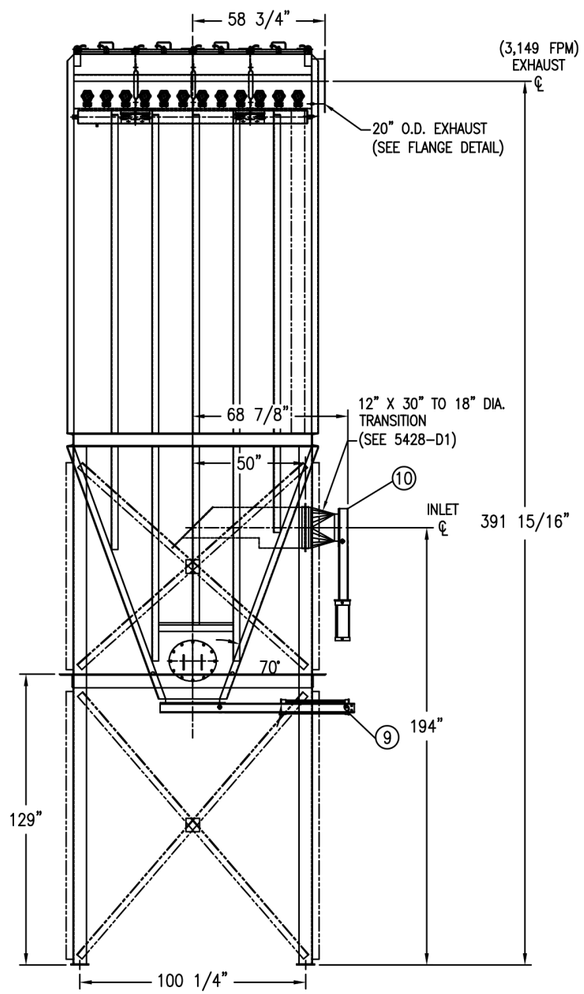

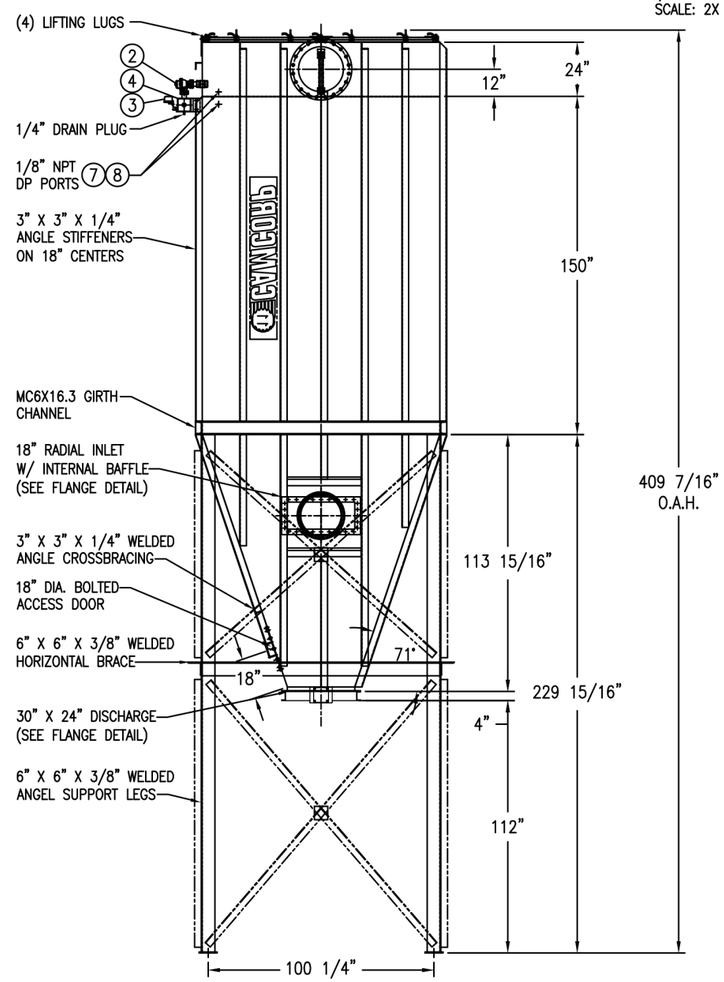

ASSOCIATED DWG. LIST	ITEM	QTY	DESCRIPTION
5428-D1	1A	144	6" DIA X 144" LG., 16 OZ. SINGED POLYESTER FILTER BAGS,
	1B	144	6" DIA X 144" LG., GALV., (12) WIRE, CAGE W/ INTEGRAL VENTURI
	2	12	1 1/2" DIA. TURBO DIAPHRAGM VALVES – NYLON TUBING
	3	12	1/8" DIA. TURBO SOLENOID VALVES MOUNTED IN A NEMA 4 ENCLOSURE
	4	1	6" X 6" X 1/4" SQ. TUBE COMPRESSED AIR HEADER – CARBON STEEL
	5	12	1 1/2" GUARDIAN QUICK JOINT COMPRESSION COUPLING – STD LENGTH
	6	1	DP KIT W/ DWYER MAGNEHELIC GAUGE, MOUNT BRACKET, SHIPPED LOOSE
	7	1	NCC, 20-POSITION TIMER, NEMA 4 ENCLOSURE, SHIPPED LOOSE
	8	30'	1/4" NYLON TUBING & NECESSARY FITTINGS
	9	1	SALINA-VORTEX 24" X 30" RECTANGULAR ROLLER GATE – AIR OPERATED (5428-2)
	10	1	SALINA-VORTEX 12" X 30" RECTANGULAR ROLLER GATE – AIR OPERATED (5428-3)
	11	1	20" DIA BUTTERFLY VALVE – AIR OPERATED

APPLICATION SPECIFICATIONS			
APPLICATION	DUST COLLECTION		
PRODUCT	THIXOCARB	LOADING	8,000 LBS/HR
AIR VOLUME	6,700 ACFM	DESIGN RATING	-40" W.C.
AIR TO MEDIA RATIO	2.43 TO 1	SQ. FT. CLOTH AREA	2,765 SQ. FT.
OPERATING TEMP	250°F	ALTITUDE	800'
CAN VELOCITY	87 FPM	INTERSTITIAL VELOCITY	137 FPM
COMPRESSED AIR	90-100 PSIG	SCFM	10-15 SCFM
CONTROL POWER	110V	MOTOR POWER	N/A
WEIGHT	MFG: 10,442 LBS.	COMPONENT: 1473 LBS.	TOTAL: 11,915 LBS.

MATERIAL OF CONSTRUCTION			
CAP/GAS:	#12 GA. C.S. CONST.	DAP/PRODUCT:	#12 GA. C.S. CONST.
SUPPORTS:	6" X 6" X 3/8" C.S. ANGLE	LADDER:	N/A
HOPPER:	#12 GA. 304 STAINLES STEEL CONST.	TUBE SHEET:	3/16" THICK C.S. CONST.
ROOF:	#12 GA. C.S. CONST.	WALKING SURFACE:	#12 GA. C.S. TOP DOORS

MATERIAL FINISHES	
INTERIOR CAP PAINT:	PRIMED & PAINTED WHITE ALIPHATIC POLYURETHANE, SSPC-SP2 TOOL CLEAN
EXTERIOR CAP PAINT:	PRIMED & PAINTED WHITE ALIPHATIC POLYURETHANE, SSPC-SP2 TOOL CLEAN
INTERIOR DAP PAINT:	NONE
EXTERIOR DAP PAINT:	PRIMED & PAINTED WHITE ALIPHATIC POLYURETHANE, SSPC-SP2 TOOL CLEAN
ROOF RAIL./LADD. PAINT:	N/A
STRUCT. SUPP. PAINT:	PRIMED & PAINTED WHITE ALIPHATIC POLYURETHANE, SSPC-SP2 TOOL CLEAN
INTERIOR CAP WELDS:	STITCH WELDED
EXTERIOR CAP WELDS:	CONTINUOUS – NOT GROUND
INTERIOR DAP WELDS:	STITCH WELDED
EXTERIOR DAP WELDS:	CONTINUOUS – NOT GROUND
SPECIAL NOTES:	ALL ITEMS CARBON STEEL EXCEPT HOPPER WALLS, HOPPER WALLS NOT TO BE PAINTED

(2) UNITS REQUIRED
TAG: G9B, G9D

REV	DRAWING STATUS	BY	DATE
REV 4	CORRECTED DISCHARGED HOLE SPACING DIM	BLB	07/19/18
REV 3	MADE RECTANGULAR INLET TRANSITION SYMMETRICAL	BLB	06/26/18
REV 2	CORRECTED SIDE INLET VIEW, SHOP CORRECTIONS	BLB	06/25/18

CAMCORP
9732 PFLUMM ROAD, LENEXA, KS 66215 PHONE: 913-831-0740 FAX: 913-831-9271

THIS DRAWING AND THE SOLUTIONS/DESIGNS ARE THE PROPERTY OF CAMCORP, INC. AND ARE FURNISHED ONLY FOR INFORMATIONAL PURPOSES ON A CONFIDENTIAL BASIS. REPRODUCTION, PUBLISHING, OR OTHER DISCLOSURES ARE ON A "NEED TO KNOW" BASIS ONLY. ANY OTHER REPRODUCTION REQUIRES WRITTEN AUTHORIZATION BY A CORPORATE OFFICER.

CERTIFIED
FOR CONSTRUCTION
PURPOSES
DATE: 06/19/18
SIGNATURE: Robert D. Barnes
CAMCORP, INC.

CUSTOMER:

TITLE: MODEL 12TR12X144 DUST COLLECTOR

DRAWN:	DATE:	P.O. NUMBER:	REVISION:
BLB	05/09/18		REV 4

JOB NUMBER:
DRAWING NUMBER:

REF: 5384-2

IT IS THE CUSTOMERS RESPONSIBILITY TO NOTIFY CAMCORP IN WRITING IF THE DUST IS EXPLOSIVE, OR HAS EXPLOSIVE CHARACTERISTICS