Installation, Operation, & Maintenance Manual

CAMCORP CamAiro

Vertical Cartridge Dust Collector

CAMCORP

Unique Design & Engineering Approaches for Industrial Applications

TABLE OF CONTENTS

Section 6 - TROUBLESHOOTING

Section 7 - MAINTENANCE

Section 8 – APPENDIX

Section 1 – Safety Recommendations

Because this unit may be under pressure or vacuum, do not attempt to open any device, doors or panels while fans or blowers are running. The unit has air hoses and valves with a maximum recommended operating pressure of 100 psig. To eliminate the danger of bursting, care must be taken to insure maximum desired pressure is not exceeded.

Before servicing any portion of the compressed air system the air supply must be shut off and any pressure relieved.

If your unit is equipped with a discharge auger or an airlock assure that chain guards are installed before start-up and servicing is attempted only after electrical power is locked out.

While servicing the filter it is very important that there are no open flames, welding or grinding sparks. Dust laden air could be highly explosive and extreme care must be taken. Most filter cartridges will burn if exposed to sparks, welding or open flames.

Before entering any dust collector:

- Run cleaning mechanism 20 minutes with the fan off to clean the filter cartridges.
- Completely discharge dust solids from hopper, if applicable.
- Shut off compressed air supply and relieve pressure in the compressed air manifold.
- Lock out all electrical power on all equipment especially rotating equipment.
- On toxic operation, purge collector housing and install a blank in the inlet duct.
- Install catwalks and safety cables as required.
- Secure access doors in an open position or remove doors.
- Use the buddy system.
- Wear a respirator or appropriate breathing equipment.
- Use common sense.

Follow all current OSHA regulations relative to Lockout / Tag-Out and Confined Space Entry and any other applicable regulations when servicing your equipment.

On the following page are examples of safety stickers you will find on Camcorp equipment. These will help identify potential hazards on the equipment.

CAMCORP, INC.
Phone: 913-831-0740 Fax: 913-831-9271
www.camcorpinc.com

Section 2 - Receiving

Receiving the Equipment

Prior to accepting the shipment(s) care must be taken to inspect all equipment received both for proper count and for damage. Any and all irregularities must be noted on the carrier's copy of the shipping receipt to assist in settling any claims for damage or shortages. All equipment is shipped FOB point of origin whether on a prepaid or collect freight basis.

ANY CLAIM FOR DAMAGE IN TRANSIT OR SHORTAGES MUST BE BROUGHT AGAINST THE CARRIER BY THE PURCHASER.

Once your claim has been filed with the carrier, contact CAMCORP to notify us of the problem(s). We will then advise the appropriate repair procedure or recommend it be returned to our factory, depending on the extent of the damage.

Inspection of the Equipment

Housing, Compressed Air Header and Timer Assembly: Particular attention should be paid to the sheet metal housing of your collector. The unit should be inspected for dents, cracks or rips. A dented housing may seriously affect the structural integrity of the unit. The compressed air header and timer assembly are very delicate pieces of the unit and must be checked carefully for any signs of impact, warpage or loose fittings. If any of these signs are present note them on the shipping receipt and notify CAMCORP immediately. The entire unit should be checked against the certified drawings for correctness. CAMCORP should be notified immediately if there are any discrepancies. No corrections may be made without the expressed written consent of CAMCORP.

Components: A count should be made of all pieces received and this should be verified against the carrier's manifest. Boxes should be inspected for rough handling, which may have resulted in hidden damage.

CAMCORP, INC.
Phone: 913-831-0740 Fax: 913-831-9271
www.camcorpinc.com

Storage Recommendations

Baghouse, Bin Vent, Filter Receiver, Dirty Air Hopper and Housing

- Housing can be stored outside.
- Equipment must be blocked up to keep the flanges out of the dirt.
- Most units are supplied with a plain unfinished interior. If storage of more than two weeks is anticipated the interior should be prime coated before storage.
- Covering the unit with a tarp is recommended to help keep the interior from rusting or corroding as well as keeping the outer finish in new condition.

Baghouse, Bin Vent, Filter Receiver, and Clean Air Plenum

- Unit can be stored outside.
- Compressed air header, diaphragm and solenoid valves must be tarped for weather protection.
- Position unit so water will not get in or remain inside the tube sheet area.
- Unit must be blocked up to keep the flanges, bag cups, venturis and air header out of water and dirt.
- Ports on diaphragm and solenoid valves must be plugged and taped to keep insects, dirt and moisture out.
- For extended storage (more than 4 weeks), it is recommended to remove the timer panel and solenoid valve assembly (if mounted). These components should be stored inside a cool dry area along with the copper or black nylon tubing. The solenoids should have all ports capped and taped to protect from insects, dirt and moisture.
- The unit should be tarped.

Pleated Filter Cartridges

- As a standard, the filter cartridges are installed in the dust collector before shipment.
- If the dust collector will be stored outside for a period of time, the filter cartridges must be uninstalled and stored inside a cool dry area protected from moisture, rodents and insects.
- If the filter cartridges get wet for any reason, immediately lay them out with plenty of ventilation to dry in order to prevent mold and mildew.

CAMCORP, INC.
Phone: 913-831-0740 Fax: 913-831-9271
www.camcorpinc.com

Storage Recommendations (continued)

Accessory Parts

- This includes all gauges, nylon or copper tubing, valves, gaskets and other parts not specifically called out.
- These items should be stored inside a cool dry place protected from moisture, insects, and rodents.

Fan and Fan Accessories

- Fans can be stored outside on a pallet or skid to keep them out of water and dirt.
- Fan silencers, outlet dampers, and inlet boxes should also be tarped and stored on a pallet or skid.
- Reference fan IOM manual for long-term storage.

Ducting

- Ducting can be stored outside on a pallet or skid to keep it off the ground. It should be positioned so that water does not sit on or in the ducting.
- If ducting is unpainted carbon steel it should be at least primed coated before storage.
- If ducting is already finish coated, it should be tarped to protect the finish.

Knife Gate

- All limit switches, solenoids, and air cylinder ports must be capped and taped to prevent any moisture or dirt from entering.
- Equipment can sit outside provided it is covered with a tarp and is on a pallet or skid to keep it out of water and dirt.
- Reference knife gate IOM manual for long-term storage.

CAMCORP, INC.
Phone: 913-831-0740 Fax: 913-831-9271
www.camcorpinc.com

Storage Recommendations (continued)

Isolation Dampers

- All limit switches, solenoids, and air cylinder ports must be capped and taped to prevent any moisture or dirt from entering.
- Equipment can sit outside provided it is covered with a tarp and is on a pallet or skid to keep it out of water and dirt.

Rotary Valve

- Rotor and interior of valve should be well oiled with vegetable oil to prevent rust and to maintain compatibility with product.
- Unit can be stored outside provided it is covered with a tarp and is on a pallet or skid to keep it out of water and dirt.
- Reference rotary valve IOM manual for long-term storage.

Butterfly (Wafer Valve)

- All limit switches, solenoids, and air cylinder ports must be capped and taped to prevent any moisture or dirt from entering.
- Unit can be stored outside provided it is covered with a tarp and is on a pallet or skid to keep it out of water, dirt and sunlight.
- Reference butterfly valve IOM manual for long-term storage.

Level Indicators

- Store these items inside a protected cool dry area.

AC Inverters

- Store these items and all other electrical controls inside a protected cool dry area.

CAMCORP, INC.
Phone: 913-831-0740 Fax: 913-831-9271
www.camcorpinc.com

Section 3 - Installation

Setting Up Your Unit

CAMCORP dust collectors are shipped either in one piece, fully assembled, or in two or more sections depending on the unit size and weight. Before attempting to move the dust collector or any of its sections review both the certified general assembly drawing supplied from CAMCORP and the rigging and lifting guidelines included in this manual. Become familiar with the size and number of sections to be assembled, the orientation of inlet(s), outlet(s), access door(s) and compressed air header(s), as well as the number and location of lifting lugs.

Dust collectors of this type are manufactured from steel sheets or plate and are quite flexible. Therefore, even though care has been taken to maintain dimensional accuracy and squareness, some difficulty should be anticipated and temporary bracing in the field may be required.

The following sequential procedure will help to minimize any assembly difficulties:

STEP 1: Set up the supporting steel or legs for the dust collector level and square. Precision at this point will greatly help facilitate erection and bolt hole alignment of the dust collector sections.

STEP 2: Place the hopper on the supporting steel or legs. Check for squareness, and for bolthole alignment between the hopper and the support steel or legs. Install and tighten all fasteners to the appropriate specifications.

STEP 3: Lift the top section of the dust collector into place. DO NOT LOWER THE SECTION ONTO THE HOPPER FLANGE UNTIL ALIGNMENT IS ACCOMPLISHED. The silicone caulk makes horizontal movement very difficult once a load is applied. With the top section suspended over the hopper ½" to 1", apply silicone caulk onto the hopper flange. Begin bolt hole alignment starting at the center of the plenum and working toward the ends by using tapered drift pins. If the wall(s) has flexed out of square it will be necessary to pry or pull it back into alignment. Depending on the size of the unit and the degree of difficulty hydraulic jacks and come-alongs may be required. When the mating holes are properly aligned, finish lowering the plenum. Install the remaining bolts, washers, and nuts and torque to the appropriate specifications.

CAMCORP, INC.
Phone: 913-831-0740 Fax: 913-831-9271
www.camcorpinc.com

Setting Up Your Unit (continued)

Step 4: Platform and ladder, if applicable, can now be attached. Torque the fasteners to the appropriate specifications.

All CAMCORP dust collectors are provided with lifting lugs for ease in handling of the units during field erection and installation. The number and location of these lifting lugs will vary depending on the model, size, and weight of the dust collector. Before attempting to rig and lift your dust collector, please review the certified general assembly drawing supplied from CAMCORP to verify the number and location of the lifting lugs. Visually check this information on the actual equipment also. Large units are frequently shipped in several sections, so check the lifting lugs provided on each section. If these cannot be used or there is some question about lifting lug location consult the engineering staff at CAMCORP for proper location since proper care must be taken to prevent damage to housing or its components.

Rigging and Lifting Guidelines

Do not lift the dust collector by any attachments other than the lifting lugs provided.

Use all of the lifting lugs provided on the dust collector or section of the dust collector when making a lift.

If the lifting lugs are located below the roofline of the dust collector or below the top of the section of the dust collector a vertical pull must be made to avoid crushing the top of the unit. Use spreader beams to accomplish this vertical pull.

Attach tag lines at several locations to help in controlling the unit when lifted and to prevent spinning or swinging.

The dust collector should be lifted and lowered at a slow, uniform rate and not allowed to bounce or joggle since this can cause excessive impact stresses at the lift points.

CAMCORP, INC.
Phone: 913-831-0740 Fax: 913-831-9271
www.camcorpinc.com

Setting Up Your Unit (continued)

Compressed Air Manifold: Typically, CAMCORP ships the compressed air manifold installed complete with diaphragm valves and solenoid enclosure(s), except when units are over legal shipping width with them in place.

Flanges: All bolts on flanges should be tight. All ports in the dust collector not being used must be plugged prior to start-up.

Electrical: A 120 volt 60 Hertz circuit is required to operate the dust collector's pulse-jet cleaning system (unless a different voltage for components was requested). This timer must be wired according to the wiring diagrams and be provided with a circuit that is free from transient currents. Do not over fuse.

The DWYER "Smart Timer" board has adjustable pulse duration and interval (time between valves firing) settings. Since there are many variances in operations and conditions these are presented only as initial start-up guidelines. If you experience problems in cleaning of the filter cartridges, please contact CAMCORP.

TIMER BOARD ADJUSTMENTS
(Recommended at start-up)

VALVE SIZE	PULSE DURATION	INTERVAL
1"	.10 to .12 seconds	20 to 25 seconds
1-½"	.06 to .08 seconds	20 to 25 seconds
2"	.18 to .20 seconds	20 to 25 seconds

CAMCORP, INC.
Phone: 913-831-0740 Fax: 913-831-9271
www.camcorpinc.com

Setting Up Your Unit (continued)

The firing sequence of the diaphragm valves on the dust collector should be set so that no two adjacent rows of cartridges fire in succession (if possible) to insure maximum cleaning and life of the filter media. This can only be achieved when wiring the pulse timer board to the solenoid valves.

Apply electrical power to the smart timer and make sure that it is cycling completely through all rows of the unit. This will only happen when the smart timer is put into manual mode. Refer to the Dwyer IOM manual included in this manual for further start-up instructions.

If your dust collector was shipped via common carrier rather than a contract hauler there is a possibility that the solenoid enclosure was not shipped installed on the unit. If this is the case, there is a mounting plate welded on the housing or the air header with the bolt pattern of the enclosure already drilled. Bolt the enclosure and install the nylon (or copper) tubing with the fittings provided making sure that the solenoids are connected to their corresponding diaphragm valve.Di

Valves and Piping: After the unit has been installed the diaphragm valves should be checked to make sure that the port marked "IN" is assembled to the compressed air manifold. The "IN" connection of the solenoid valve is connected to the diaphragm valve by means of ¼" nylon or ¼" copper refrigeration tubing. Each nut on the compression fittings should be checked for tightness before the compressed air manifold is pressurized. In most cases a slip fit fitting has been used. The integrity of the nylon tubing inside each fitting should be checked by pulling gently on each tube. If the tube pulls out, simply push it back into the fitting until it will not go any further. The solenoids are shipped with a plastic plug in the discharge side of the valve. These plugs <u>must</u> be removed for proper operation.

Differential Pressure Ports: The differential pressure ports are located together in the side wall of the dust collector. One above the tubesheet and one below. Nylon or metal tubing must be connected to each port and run to the smart timer enclosure. Tube fittings are included with the shipment and should be located in the miscellaneous parts box.. When installing the tubing, make sure that the high-pressure port on the timer enclosure is connected below the tube sheet and the low-pressure port is connected above the tube sheet on the dust collector.

CAMCORP, INC.
Phone: 913-831-0740 Fax: 913-831-9271
www.camcorpinc.com

Auxiliary Equipment: All auxiliary equipment must be installed according to its manufacturer's specifications and interlocked with the entire system as needed. Direction of rotation of each item must be checked prior to start-up of the entire system.

CAMCORP, INC.
Phone: 913-831-0740 Fax: 913-831-9271
www.camcorpinc.com

Cartridge Installation

- Open the access door on the dust collector.
- Depending on the size of your dust collector, there are a number of rails or carriage assemblies attached to the bottom of the tube sheet for the filter cartridges to be support from.
- The handle levers for each rail should be pushed forward, which lowers them and allows the filter cartridges to be either installed or removed.

CAMCORP, INC.
Phone: 913-831-0740 Fax: 913-831-9271
www.camcorpinc.com

Cartridge Installation (continued)

- The filter cartridges have a metal mounting flange around the top of them.
- If the dust collector requires over bags, they should be installed before installing the filter cartridges into the dust collector.
- Pick-up the filter cartridge(s) and slide the metal pan over the top of the lowered rails of the carriage assembly. Be careful not to damage the filter media when handling them.
- Push the cartridges toward the back of the dust collector as far as possible.

CAMCORP, INC.
Phone: 913-831-0740 Fax: 913-831-9271
www.camcorpinc.com

Cartridge Installation (continued)

- After the filter cartridge(s) are all slid in, grab both lever arms and pull forward. Be careful again to not damage the filter media.
- The levers will raise the filter cartridge(s), making them seal against the tube sheet.

- Reverse this procedure to uninstall the cartridges.

CAMCORP, INC.
Phone: 913-831-0740 Fax: 913-831-9271
www.camcorpinc.com

TIMER BOARD ADJUSTMENTS
(RECOMMENDED AT START–UP)

VALVE SIZE	PULSE DURATION	INTERVAL
1"	.10 TO .12 SECONDS	20 TO 25 SECONDS
1 1/2"	.06 TO .08 SECONDS	20 TO 25 SECONDS
2"	.18 TO .20 SECONDS	20 TO 25 SECONDS

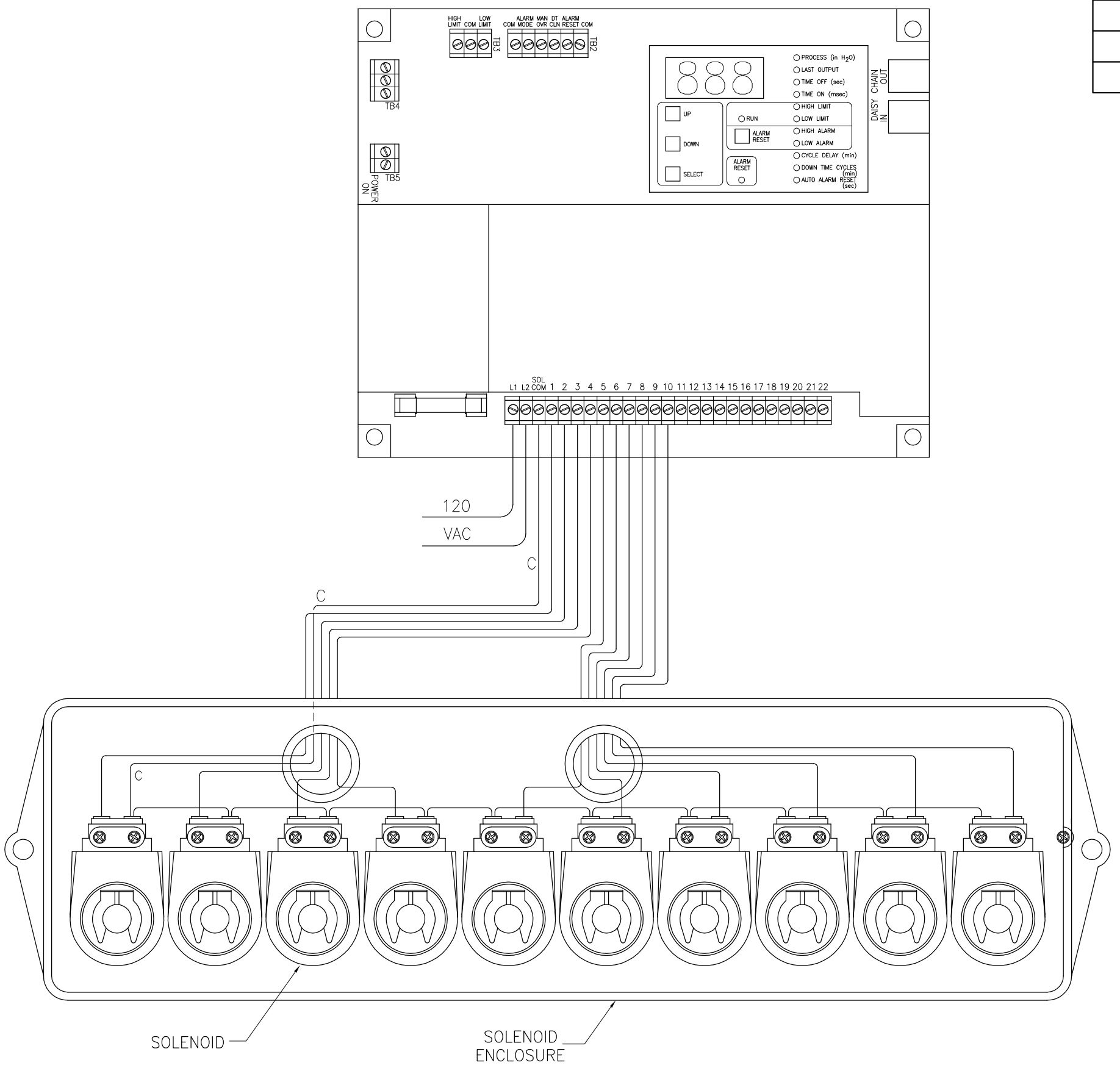

INPUT:
OPERATING VOLTAGE: 80 TO 270 VOLTS A.C. 50/60 HZ
SINGLE PHASE

OUTPUT:
TYPE: SOLID–STATE SWITCH RATED AT 200 VA MAX. PER OUTPUT. NUMBER OF OUTPUTS TO BE ACTIVATED BY POSITION OF PROGRAM WIRE.

ENCLOSURE: NEMA 4X

POWER CONSUMPTION: 5W

OUTPUT SIGNAL: 4–20 mA

PROTECTION:
SHORT CIRCUIT PROTECTION: 3 AMP. FUSE

ENVIRONMENTAL:
OPERATING TEMPERATURE: –40°F TO 140°F (–40°C TO 60°C)

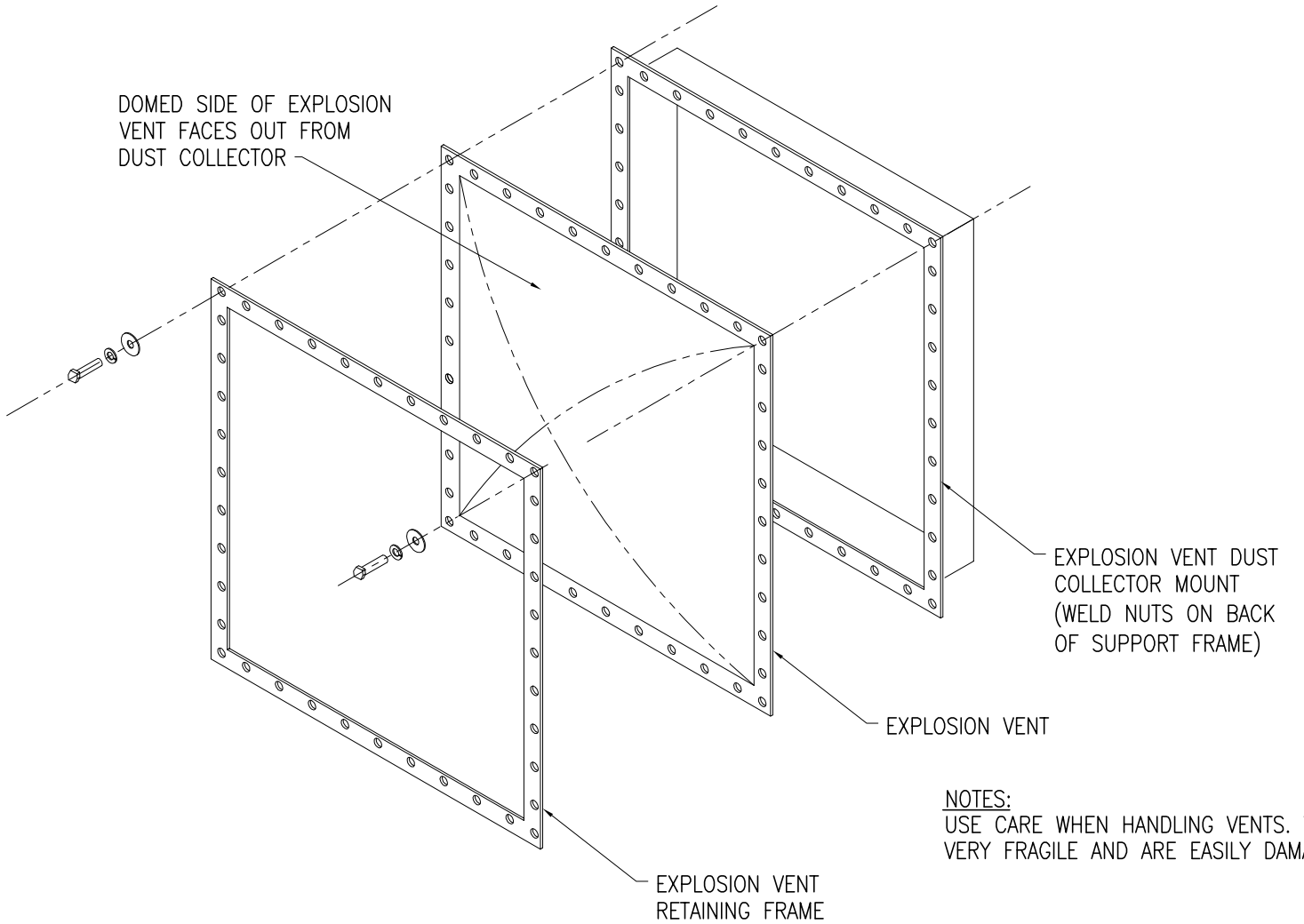

NOTES:
USE CARE WHEN HANDLING VENTS. VENTS ARE VERY FRAGILE AND ARE EASILY DAMAGED.

EXPLOSION VENT MOUNTING DETAIL

Section 4 - Operation

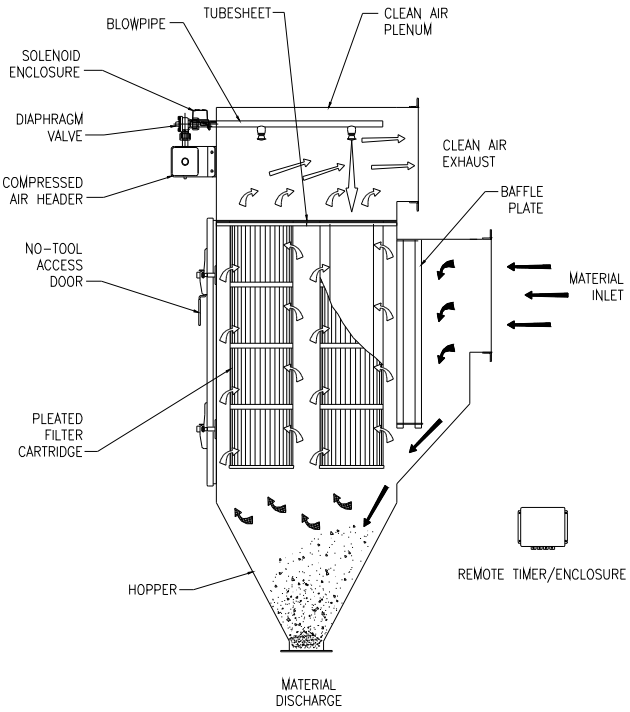

Operating Principle

A. Solids laden air or gases enter the unit at the hopper or housing inlet.
B. Air passes through the filter media.
C. Solids are retained on the filter media surface.
D. Cleaning cycle consists of a momentary blast of 80-90 psig compressed air:
    1. Momentarily taking a row of cartridges off stream through pressure reversal.
    2. Flexing filter cartridge media.
    3. Solids are released to fall towards hopper and through rotary valve or other discharge equipment.

CAMCORP, INC.
Phone: 913-831-0740 Fax: 913-831-9271
www.camcorpinc.com

Start-Up Checklist

Installation

Make sure the unit is secured to the floor or mounting surface. The ladder(s) and platform(s) must be tightened and set up according to OSHA requirements. Ducting and piping must be secured and routed out of the way of traffic whenever possible to avoid injury. Ducting must also be free of all debris including moisture.

Interior of Dirty Air Plenum

Inspect the filter cartridges, referring to the “Filter Cartridge Installation” section of this manual. Improperly installed cartridges may allow dusty air to enter the clean air plenum.

Exterior of Dust Collector

Access doors, inspection ports and spring-loaded relief vents should seat effectively to prevent leakage.

All bolts must be properly tightened.

Operate any equipment connected to the dust discharge of the dust collector. Check the rotation of any motor driven equipment such as rotary airlocks, horizontal unloading valves, live bottom bin activators and screw conveyors. Check slide gates and butterfly valves for binding.

CAMCORP, INC.
Phone: 913-831-0740 Fax: 913-831-9271
www.camcorpinc.com

Start-Up Checklist (continued)

Explosion Relief Panels – Shear Bolt Style (when used)

Inspect explosion relief vents (when used) for broken or damaged explosion bolts. **ASSURE THAT THERE ARE NO STEEL BOLTS USED FOR THE INSTALLATION OF THE EXPLOSION RELIEF PANEL!!!** These bolts are made of special high tech poly-vinyl chloride and are designed to relieve at a specific pressure. A magnet should be used to check for steel bolts.

Explosion Relief Panels – Rupture Style (when used)

Inspect explosion relief vents for cracks and that all mounting bolts are tight.

Compressed Air System

The pulse timer board must be correctly wired and mounted in its enclosure in a suitable location.

All the ¼" copper or nylon tubing connections between the diaphragm and the solenoid valves must be tight and the tubing must not be crimped.

The plugs (when used) must be removed from the exhaust ports of the solenoid valves and the tubing from the diaphragm valves must be connected to the "IN" port on the solenoid valves.

The compressed air supply system must be equipped to supply clean, dry air to the pulsing air system. At this time assure that there is a suitable air pressure gauge on the air header for reading 0-160 psig.

Start the compressed air supply system and check for air leaks in all parts of the system. If air is heard escaping through one or more of the blowpipes (with the timer off), please refer to the "Troubleshooting the Compressed Air System" section of this manual. Gauge pressure at the compressed air manifold(s) should be 80-90 psig.

CAMCORP, INC.
Phone: 913-831-0740 Fax: 913-831-9271
www.camcorpinc.com

Start-Up Checklist (continued)

With the compressed air system operating, energize the smart timer board to begin pulsing. The smart timer must be put in manual mode. Check to see that all solenoids are firing by placing a finger over the exhaust port of one of the solenoid valves. When the solenoid valve being checked is energized by an electrical pulse from the timer board the finger at the exhaust port should feel a short blast of air. Quickly move to the next solenoid valve in the firing order noting any valves that do not fire or are stuck open causing a continuous airflow out of the exhaust port of the valve. At this time note the quality of the compressed air. It should be clean, dry, and oil free.

Allow the compressed air system to operate as long as possible to clear the system of dirt, rust, scale, welding slag and metal chips that can cause the diaphragm valves to stick.

The pressure at the compressed air manifold must recover to 80-90 psig before each pulse. Make sure that there is adequate compressed air delivery for full pressure recovery when all other systems connected to the same air supply are operating at full capacity.

CAMCORP, INC.
Phone: 913-831-0740 Fax: 913-831-9271
www.camcorpinc.com

Start-Up Dust Control Systems

Fan or Blower System

Start the fan or blower and check for proper rotation.

Check dust pickup points for proper suction. Balance airflow in individual ducts.

Check for air leakage at all flanged connections.

Equipment Start-Up Sequence

The compressed air supply system must be started first.

When the pressure gauge on the compressed air manifold indicates that the system is at full pressure (80-90psig) the pulse timer can be energized.

Dust take away equipment such as rotary airlocks, screw conveyors, horizontal unloading valves, live bottom bin activators and pneumatic conveying systems can now be started in their correct sequence.

Check that all access doors, hatches, ports, and other openings are closed and latched or bolted.

The main exhaust fan can now be started and brought up to speed.

Start the dust-laden air through the collector. The collector should be started under partial load to allow the cartridges to become slowly and evenly coated with dust particles.

On pneumatic conveying systems watch the differential pressure gauge closely for the first hour or so. If unstable, the collector discharge system may be too small for the volume it is seeing. A quick fix is to reduce the material feed until the discharge rate can be increased.

Observe the manometer or magnahelic differential pressure gauge reading. As the new filter cartridges become coated with dust, the efficiency of the filtering action increases and the differential pressure across the filter cartridges will also increase. Slowly bring the collector to full load and note the final pressure drop across the filter cartridges. Never allow the pressure drop across the filter cartridges to exceed 17” w.g. maximum or the filter cartridges may collapse.

CAMCORP, INC.
Phone: 913-831-0740 Fax: 913-831-9271
www.camcorpinc.com

Shutdown Procedures

Dust control systems

Reverse start-up procedure, shut down fan, then after a 5 or 10-minute delay, shut down the timer and discharge system.

Pneumatic systems

Reverse start-up procedure, shut down fan, then after 5 or 10 minute delay, shut down the timer and discharge system.

CAMCORP, INC.
Phone: 913-831-0740 Fax: 913-831-9271
www.camcorpinc.com

Section 5 - Component Information

The following pages show details of the mechanical and electrical components of a typical dust collector. Below is information for identifying each component and repair kit if applicable.

Dwyer Magnehelic Differential Pressure Gauge

Camcorp part number 400031 – Range: - 15" w.c.

Timers – Dwyer Instruments Smart Timers (Optional)

Replacement Timer Boards Only (Does not include pressure module)

Camcorp P/N 400028 – Dwyer # DCT-1006 (6 Outputs)
Camcorp P/N 400029 – Dwyer # DCT-1010 (10 Outputs)
Camcorp P/N (call) – Dwyer DCP100 (0-10" Pressure Module)

Diaphragm Valves (Compression Coupling Ends) - Goyen

Camcorp P/N 400002 – Goyen # RCA25DD (1" Valve)
Camcorp P/N 400003 – Goyen # RCA45DD (1 1/2" Valve)
Camcorp P/N 400009 – Repair Kit Goyen # G-25 (1" Valve)
Camcorp P/N 400010 – Repair Kit Goyen # G-45 (1 1/2" Valve)

Solenoid Valves – NEMA 4 / 120VAC – Goyen

Camcorp P/N 400043 – Goyen #RCA3-5V3000-331 (3 Valves)
Camcorp P/N 400044 – Goyen #RCA3-5V4000-331 (4 Valves)
Camcorp P/N 400065 – Goyen #RCA3-5V5000-331 (5 Valves)
Camcorp P/N 400059 – Goyen #RCA3-8V6000-331 (6 Valves)
Camcorp P/N 400058 – Goyen #RCA3-8V7000-331 (7 Valves)
Camcorp P/N 400070 – Goyen #RCA3-8V8000-331 (8 Valves)
Camcorp P/N 400056 – Goyen #RCA3-12V9000-331 (9 Valves)
Camcorp P/N 400045 – Goyen #RCA3-12V10000-331 (10 Valves)

Camcorp P/N 400020 – Repair Kit Goyen # K0380 (1/8" Solenoid)

CAMCORP, INC.
Phone: 913-831-0740 Fax: 913-831-9271
www.camcorpinc.com

Explosion Vents (if applicable) - Confirm Vent(s) with Camcorp

Camcorp P/N 400068 – 18”x35” Flat Vent, 1.5 PSI Burst
Camcorp P/N 400105 – 18”x35” Domed Vent, 1.5 PSI Burst
Camcorp P/N 400067 – 36”x36” Flat Vent, 1.5 PSI Burst
Camcorp P/N 400096 – 36”x36” Domed Vent, 1.5 PSI Burst

The parts above are supplied as standard components on a Camcorp dust collector. If you require high temperature components, NEMA 7/9 electrical components, 24VDC or 220VAC components, etc. please contact Camcorp for the correct parts.

CAMCORP, INC.
Phone: 913-831-0740 Fax: 913-831-9271
www.camcorpinc.com

Series DCT1000 Dust Collector Timer Controller

Specifications – Installation and Operating Instructions

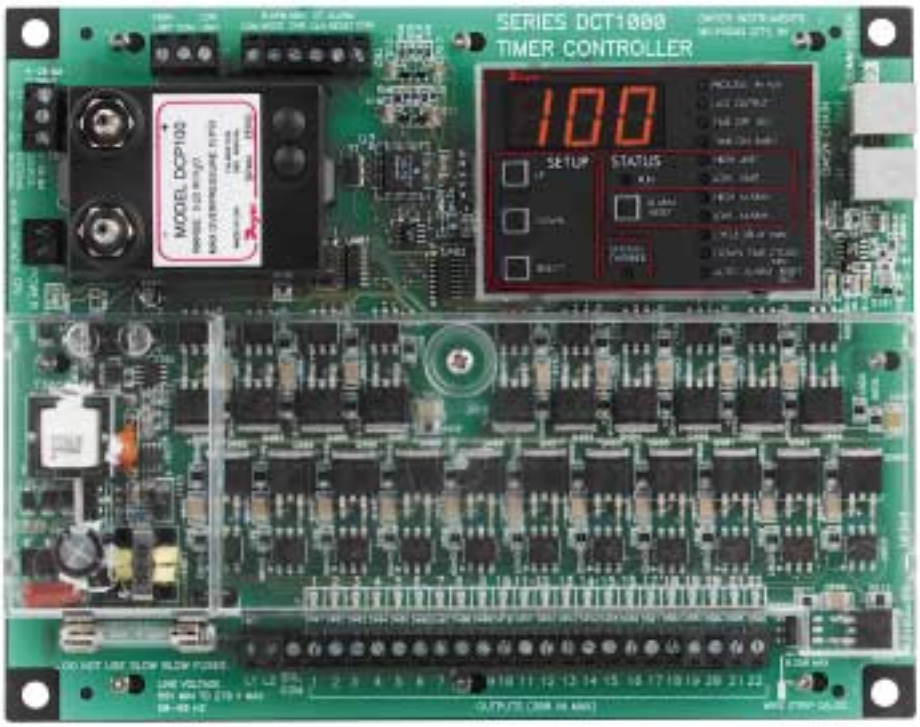

Thank you for purchasing the DCT1000 Dust Collector Timer Controller. You have selected a state of the art dust collector timer control that will provide years of dependable operation and service.

The DCT1000 Dust Collector Timer Controller was designed to be used with pulse-jet type dust collectors for on-demand or continuous cleaning applications. The DCT1000 consists of three basic modules: the master controller, the optional channel expander (slave board) and the pressure module (DCP100/200). This manual is limited to the installation and operation of the master controller and optional channel expander. For installation requirements on the pressure module, please refer to the installation and operating instructions for the DCP100/200.
Continuous cleaning applications do not require external inputs and can be used for time based "on-demand" cleaning through use of the cycle delay feature.
For on-demand applications, the plug-in pressure modules (DCP100/200) can be used to take full advantage of all the features the DCT1000 offers, or an external pressure switch (such as the Dwyer Photohelic®) can be used for High/Low limit control.

As with traditional Dwyer products, the Dwyer DCT1000 was designed so that it is easy to use, thus allowing for a quick and easy start up for your dust control applications. The contents inside this installation and operating manual will guide you through the features of the DCT1000 and how they can be applied to get the most out of your dust control requirements.

PHYSICAL DATA
Storage Temperature: -40˚F to 176˚F (-40˚C to 80˚C).
Operating Ambient Temperature: -40˚F to 140˚F (-40˚C to 60˚C).
Weight: 1 lb. 3.0 oz. (538.6 grams).
Power: 50 or 60 Hz, 85 to 270 VAC input.
Power input: 270 VAC RMS max., transients: 80 Joule @ 1000 msec/50 Joule @ 2 msec.
Fuse: 3A @ 250 VAC.
Low voltage control circuitry is isolated from the line voltage for system safety.
Output Channels: up to 22 on one module, expandable to 255 using additional expansion modules.
Solenoid supply: 300 VA max.
On-time: 10 msec to 600 msec, 10 msec steps.
On-time Accuracy: ±10 msec.
Off-time: 1 to 255 seconds, in 1 second steps.
Off-time Accuracy: ±1% of the value or ±50 msec, which ever is greater.

Default Settings:
Channels: All installed channels
Time-off: 10 seconds
Time-on: 100 msec.
Down-time Cycles: 1 minute
Cycle Delay: 0 minutes.
Low Alarm: 1.0″ w.c. [0.25 kPa]
High Alarm: 6.0″ w.c. [1.49 kPa]
Low Limit: 3.0″ w.c. [0.75 kPa]
High Limit: 5.0″ w.c. [1.24 kPa]
Auto Alarm Reset: 5 seconds.

DWYER INSTRUMENTS, INC.
P.O. BOX 373 • MICHIGAN CITY, INDIANA 46361 U.S.A.
Phone: 219/879-8000 **www.dwyer-inst.com**
Fax: 219/872-9057 **e-mail: info@dwyer-inst.com**
Lit-by-Fax: 888/891-4963

Table of Contents . . . . . .Page No.

1.0 Installing the DCT1000

Warning: Always install and service this device with the power off and a lockout installed if required. Line voltages will be exposed at the power/output connector and at the fuse. For this reason, we have installed a plastic guard to protect the user from accidentally contacting line voltages.

***Please note** that the power guard serves as a safety feature and should not be removed under any circumstances.*

For ease of installation and maintenance, the connectors and fuse have been left unprotected. The open frame design of the DCT1000 will require an enclosure that meets appropriate safety and local code requirements. For optimal performance, the enclosure should also protect the controller from dirt, water and direct sunlight. There are no special orientation requirements, and the controller mounts easily using the mounting holes on the factory installed base plate.

Caution: Do not run control wires, communication cables, or other class 2 wiring in the same conduit as power leads. The system may malfunction if class 2 wiring is run together with power conductors.

1.1 Power Requirements

The controller has a “universal” power supply that will allow operation on 120 VAC to 240 VAC power lines. The input voltage must be between 85 VAC and 270VAC either 50 or 60 Hz. No circuit changes are required when switching between these voltages. The solenoid loads, however, must be sized to accommodate the line voltage selected.

1.2 DCT1000 Terminal Connections

The line and solenoid connections are located at the lower edge of the board below the plastic guard. The terminal block is a “Euro” style connector system that clamps the wire within the connector body. The connector will accept wire sizes from 14 to 22 AWG. The wire should be stripped to no more than 0.25 inches to avoid shorts or expose line voltages creating a potential safety hazard. To assist you in determining the proper wire gauge required, a strip gauge is provided at the lower right corner of the board. The connector system used on the DCT1000 is specified for single connection but you can piggyback to a single lug provided that local codes allow for this and good workmanship practices are followed. To power up the master controller and the channel expander, connect line power to L1 and L2 (see dimensional specifications, Figure 2). Connect the solenoids between the selected output and the solenoid common. Solenoid common and L2 are internally connected. Switches connected to the control inputs at the top of the board must be isolated contacts connected only to the relevant terminal and to the common terminals. The following subparagraphs describe the external switch connections. Refer to figure 1 for switch connection illustration.

1.2.1 External Pressure Connection

The controller may be used with an external pressure limit switch or sensor to provide demand-cleaning operation. The high limit and low limit inputs may be used for this purpose. A simple on-off system can be established with a single pressure switch connected to the high limit input. Better control can be achieved with a high and low limit switch/gage such as the Dwyer Photohelic®. In this on-demand mode, time on, time off, and cycle delay may be programmed to define the cleaning cycle. A three pin terminal block (TB3) provides connection for external high and low limit switches (see Figure 1 on the next page). These switches must be isolated contacts. The common line must not be connected to equipment ground or protective ground, since these may introduce electrical noise and cause improper operation or possible damage to the control board. The operation of these inputs are summarized as follows (see next page):

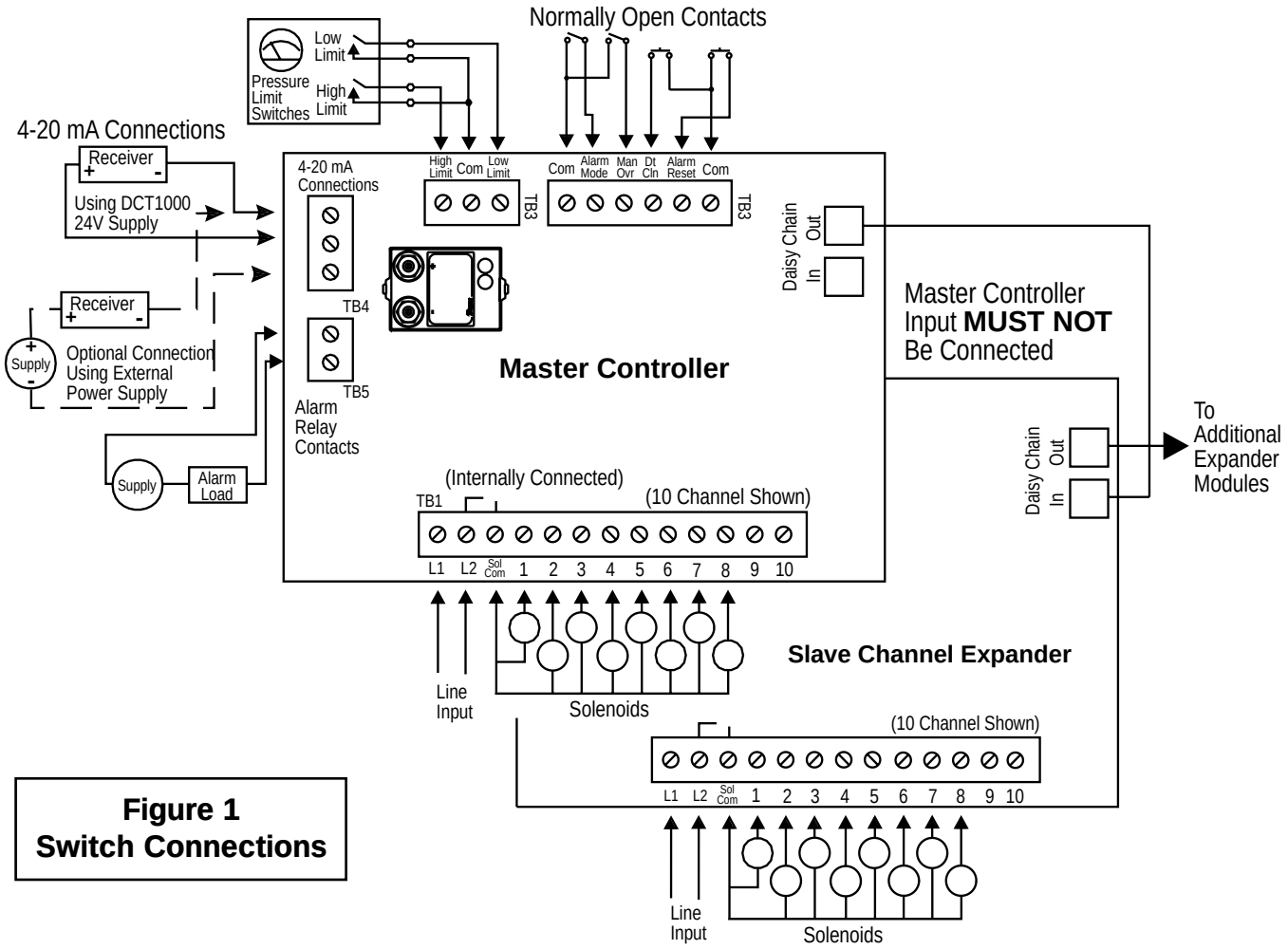

Figure 1
Switch Connections

Current Operation	Low Limit Switch	High Limit Switch	Next Operation
Hold	Open	Open	Hold
Hold or Run	X	Closed	Run
Hold	Ø	Open	Hold
Hold	Closed	Ø	Run
Run	Closed	≠	Run
Hold	Closed	Ø	Run
Run	≠	Open	Hold

Ø Transition from open to closed
≠Transition closed to open
X Either open or closed

Note: *If a DCP100 or DCP200 pressure module is installed in the master controller, the switching functions on the previous page are ignored.*

2.0 The Series DCP Pressure Module

The Series DCP100 or DCP200 Pressure Modules are designed exclusively for use with the Dwyer DCT1000 Dust Collection Board for on-demand cleaning requirements. These series of modules are available in 10″ w.c. [2.49 kPa] or 20″ w.c. [4.98 kPa] ranges, which allow for differential process pressure measurement as indicated on the display of the master controller. An isolated 4-20 mA readout channel is provided for remote pressure display. The 4-20 mA output may be wired either for use with an external power supply and indicator or using the isolated on-board 24 volt power supply to power the loop.

Caution: Prior to installing the DCP100/200 please review the operating specifications carefully. Some operating systems, especially in pneumatic conveying applications, may see static pressure or vacuum conditions that exceed the capability of the DCP100/200 pressure module. For these conditions there are a number of alternate Dwyer pressure products that can be used to meet your application requirements, all of which can be terminated to the Dwyer DCT1000 dust collection timer board. For more information on these and other Dwyer products, please call us at (219) 879-8000, or visit us on the web at www.dwyer-inst.com or www.dust-controls.com.

2.1 Location

The system should be located in an enclosure that meets relevant safety standards and electrical codes. There are no other special orientation requirements as the pressure module is not orientation sensitive. Care should be observed

when routing the air hoses to ensure that any potential condensation or moisture will not drain into the sensor. Where heavy condensation is present, a drip loop or an in-line filter should be installed to ensure long term operation.

2.2 Connections

When a pressure module is installed, the 4-20 mA process signal and the alarm relay contacts are available. The circuit may be used with the internal 24-volt power source or with an external source. In either case, the 4-20 mA circuit is isolated from ground and other signals. The alarm relay contacts are isolated, normally open contacts. Pressure connections may be made to the stepped hose barbs with either 1/8″ or 3/16″ I.C. tubing. The following subparagraphs describe the external switch connections. Refer to figure 1 for switch connection illustration.

2.3 Pressure Module Installation

The pressure module is attached to the Master Controller using integral connectors on both units. The insertion ports for the pressure module are located in the upper left quadrant of the DCT1000 Master Controller. The pressure module can be removed by compressing the retaining clips on each end of the module, then gently pulling the module out of the master controller board.

When inserting the module, the following procedure should be adhered to insure proper installation:

• Examine the bottom of the pressure module and note the orientation of the connectors.
• Align the module so that these connectors match the connector receptacles on the controller board.
• Orient the module with the four alignment pins over their respective mounting holes.
• Gently press the module into the connectors and snap the retaining clips on either end of the module into their slots.
• Always install and service this device with the power off and a lockout installed if required. “Hot” plugging the pressure module into an operating system may damage the system or cause the calibration parameters to be erased.

Caution: Do not force the module into the connectors. Forcing the insertion may damage the connectors. Properly aligned, the module should snap into place.

2.3.1 Alarm Mode Switch Connection

The auto alarm reset is controlled by the alarm mode switch connection. To enable the auto alarm reset the alarm mode input must be connected to a common connection. A jumper may be used when auto alarm reset is always active. A switch may be used if there are times that the auto alarm reset must be disabled. The switch must be an isolated contact and wired such that no connection is made between either of the wires and ground.

2.3.2 Alarm Reset Switch Connection

The alarm may be reset either by pressing the Alarm Reset button on the control panel or by an external switch connected between the alarm-reset terminal and one of the common terminals. The alarm reset will only operate if the pressure module is installed and the pressure has returned to a normal condition.

2.3.3 Connecting the 4-20 mA Loop

The pressure module provides an isolated 4-20 mA output, which may be used to remotely monitor the differential pressure across the dust bags or cartridges. The connection is made on the master control module at the terminal block designated for this signal. The connection is a 2-wire configuration with the option of using either an external 15 to 35 VDC power source or using the internal 24 VDC source.

2.3.4 Connecting the Alarm Relay

With the pressure module installed, a relay contact is provided for controlling an external alarm. This relay is a single form-A contact. It is activated when either the high alarm threshold is exceeded, or the pressure drops below the low alarm threshold. The connection is made at the two-pin connector TB5.

2.4 Demand Mode using a DCP100/200 Pressure Module

The DCT1000 system may be configured to be a self-contained on-demand control system with the installation of the DCP100 pressure module. When this module is installed, the master controller detects it and automatically sets the system to an on-demand mode, enabling features associated with the pressure sensor. The following subparagraphs describe the setup and operation of these pressure related features.

2.4.1 Manual Override Switch Connection

The manual override function allows the system to be set to the run mode regardless of other conditions. This mode is enabled when the manual override terminal and common are connected. It is disabled when they are disconnected. If the controller is to be run in continuous mode, a jumper wire may be wired across these terminals. When manual override is needed on a periodic basis, wire a SPST toggle switch between the manual override terminal and the common terminal.

2.4.2 Down Time Clean Connection

The down time clean operation forces the system into a run cycle for a programmed length of time between 0 – 255 minutes. The operation is initiated by connecting the down time clean terminal to a common terminal. This function is best accomplished through use of an external normally open switch.

2.4.3 Connecting Multiple Timer Boards

Both master controller boards and slave boards can have up to a maximum of 22 channels each. The system may be expanded up to 255 channels using master controller boards and slave boards. The DCT1000 will automatically detect the total number of channels involved and make their outputs

available. You will note that both the master controllers and slave boards have a telephone style connector mounted on the upper right hand side of the board. These connectors are for use in systems requiring slave boards that must be daisy chained together to provide additional channel capability. For systems that require the slave boards, the master controller must not have any connection made to its daisy chain input unless it is designated as a slave control itself. (For larger systems requiring more than three slave boards, a master controller must be used as the fourth slave board to satisfy power requirements.) This sequence would repeat itself until the limit of 255 channels has been reached. The cables used are not ordinary telephone style cables.

Caution: Do not use telephone jumper cables. These have a "twist" in the connection and may damage the controllers. Cables designed for use with the DCT1000 are available from Dwyer Instruments (Model DCAC02-2 ft., DCAC04-4 ft., etc.).

2.4.4 Continuous Cycle Mode

The master controller has several operating modes available for different applications. Starting with the most basic mode, it is capable of operating in a continuous cleaning cycle. This can be initiated by either placing a jumper between the high limit input and the common, or the manual override input to the common connection. Controlling this cycle are three setup parameters: time off, time on, and cycle delay. Time on and time off specifically deal with the solenoid on time and the time interval between the end of the on pulse and the start of the next. The cycle delay allows a delay of up to 255 minutes to be programmed between the end of one complete cleaning cycle and the beginning of the next. This allows additional options for defining a cleaning profile.

3.0 Master Controller Panel Features

We've made it easy to navigate the DCT1000. Menu items can be accessed simply by pressing the "SELECT" button. The menu item that you are currently accessing is indicated by the illumination of an LED. To change menu items, all you have to do is push "UP" to increase a value or push "DOWN" to decrease a value. There are no keystrokes that you need to memorize, special combinations, or passwords that are required.

The master controller is equipped with an on board display and programming information center. The controller will power-up with the process indicator illuminated. If a pressure module is installed, the display will indicate the measured pressure in inches of water (w.c.); otherwise it will normally be blank.

3.1 Last Output Setup

The Last Output setup selects the last channel to be activated. When first selected, the display will flash the last output available in the system. With single board installations, this will be the number of channels installed, typically 10 or 22. This value becomes more important when multiple modules are installed. The last output value flashed will be the sum of all channels available in the system.

After the last available channel indication has completed, the currently programmed last channel value is displayed. This value may be changed using the Up and Down buttons. The minimum value is one while the maximum value is the maximum number of installed channels, including all expansion modules.

You may restore the factory default setting by pressing both Up and Down simultaneously and holding for about four seconds. The default value is the maximum number of channels. Pressing Select will change the setup mode to Time Off Setup.

3.2 Time Off Setup

Time off defines the period of time between solenoid activations when no channels are enabled. This may be set between one second and 255 seconds. The factory default is 10 seconds. The display will show the current time off setting when the time off setup mode is entered. The value may be changed using the Up and Down buttons. Pressing both Up and Down simultaneously and holding for approximately four seconds will restore the default value of 10. Pressing the Select switch will change the setup mode to Time On Setup.

3.3 Time On Setup

Time On Setup sets the solenoid on time. The display will indicate the currently programmed time on setting. This is measured in milliseconds. Using the Up and Down buttons, the value may be changed. The value may be set between 10 msec and 600 msec in 10 msec increments. Pressing the Up and Down buttons simultaneously for approximately four seconds will restore the factory default value of 100 msec. Pressing the Select button will advance the setup mode to the High Limit setup if the pressure module is installed. With no pressure module, it will step to Cycle Delay Setup.

3.4 High Limit Setup

The High Limit Setup, available only with a pressure module installed, sets the pressure at which the cleaning cycle will begin. This value may be between zero and the pressure module calibration pressure. Normally, the High Limit should be above the Low Limit. If, however, the High Limit pressure is set below the Low Limit, the cleaning cycle will begin when the High Limit is exceeded and stop when the pressure falls below the High Limit. The Low Limit in this case will have no effect. Pressing both Up and Down buttons simultaneously and holding for about four seconds will restore the factory setting for High Limit to 5.0″ w.c. [1.24 kPa]. Pressing Select will change the system to the Low Limit Setup mode.

3.5 Low Limit Setup

The operation of the Low Limit, available only with a pressure module installed, is identical to the High Limit except that the default Low Limit pressure is 3.0″ w.c. [0.75 kPa]. The upper settable value is the calibration pressure of the pressure module and the lower limit is zero. Pressing Select will change the system to the High Alarm Setup mode.

3.6 High Alarm Setup

The operation of the High Alarm Setup is identical to the High and Low Limit Setup and is only available when a pressure module is installed. The High Alarm default is 6.0″ w.c. [1.49 kPa]. The upper settable value is the calibration pressure of the pressure module and the lower limit is zero. Pressing Select will change the system to the Low Alarm Setup mode.

3.7 Low Alarm Setup

The operation of the Low Alarm Setup is identical to the High and Low Limit Setup. The Low Alarm default is 1.0″ w.c. [0.25 kPa]. The upper settable value is the calibration pressure of the pressure module and the lower limit is zero. Pressing Select will change the system to the Cycle Delay Setup mode.

3.8 Cycle Delay Setup

The cycle delay inserts a delay time between the end of the last channel and the beginning of the first channel. This may be set to between zero and 255 minutes. The factory default is zero. Setting the value to zero will disable the delay. Pressing Select will change the system to the Down Time Cycles Setup mode.

3.9 Down Time Cycles Setup

The Down Time Cycles setup will select a value between zero and 255 minutes. The factory default is one minute. Selecting zero will disable the operation. When the down time cycles is activated by shorting the down time cycles input to the common terminal, the system will enter a forced cleaning mode for the programmed duration. The cycle delay, if one is programmed, will not be inserted in the timing cycle. Pressing Select will change the system to the Auto Alarm Reset Setup mode, if a pressure module is installed, or to Process when no pressure module is available.

3.10 Auto Alarm Reset Setup

The Auto Alarm Reset Setup, available only when a pressure module is installed, allows the auto alarm reset time to be selected. This value may be set between zero and 255 seconds. The factory default value is five seconds. When the auto alarm reset is enabled by shorting the auto alarm reset terminal to a common terminal, the alarm will be reset after the pressure returns to the normal range and the timeout has expired. Pressing Select will change the system to Process mode.

3.11 Restoring Factory Defaults

The DCT1000 has been programmed with factory default values that meet most industry operating conditions. In the event that you want to restore all of the parameters to the original factory default values:

(1) Return the master controller to the process mode.
(2) Press and hold both UP and DOWN buttons.

The display will indicate a 10-second countdown, at the end of which all parameters will be restored to factory defaults. Releasing the switches prior to the end of the count will stop the process and no modification will be made. Likewise, in each of the parameter setup modes, pressing and holding the UP and DOWN buttons simultaneously will reset the individual default value, leaving other settings unchanged.

4.0 Maintenance Support and Diagnostics

We've also included a number of features that will aid maintenance personnel in diagnosing problems or verifying that the system is operating.

4.1 Power Indicator

A power on LED indicator is provided at the center left edge of the board. This will be illuminated when the power supply is operating properly. If the power LED is not illuminated, the primary power may be off or there is a fault in the power circuit.

4.2 Active Channel Indicator

Located just above the solenoid terminations, you will find that each channel is provided with an LED that is illuminated when the triac switch is on. This allows a visual correlation between the channel being pulsed and the operation of the solenoid.

4.3 Comm Check Indicator

The comm check indicator can be found in the upper right hand corner of the slave and master controller board (just above the "out" terminal, a telephone style connector). This indicator is used for two purposes. First, on a master controller a brief flash once per second is produced to indicate that the system is operating. Second, this indicator is used to show when the communication check operation is performed on slave boards. The master controller will check each of the slave boards at a rate of about one inquiry per second, starting with the slave board connected directly to the master controller and ending with the last slave board in the chain. The master controller will flash its Comm Check LED for about 250 msec each time it makes a communication check. The external module selected for test will also flash its Comm Check LED for about the same time each time it is interrogated. Observing this test sequence will indicate that the communication between boards is operational. When a slave board powers up, the Comm Check LED will be illuminated continuously. It will be extinguished when the master controller has initialized its communication channel. This indicator then shows that a master controller is operating and that each slave board is responding properly on the daisy chain.

4.4 Error Codes

Error codes will be displayed on the three-digit display when certain faults occur. Most of these indicators are associated with the daisy chain communication, but certain error codes pertain to single board operation also. These codes are:

Display	Meaning	Action Required
Err 1	This is a "watchdog" reset that is enabled when the master controller isn't able to cycle through its operation.	Make sure all electrical connections are appropriately shielded so the master controller is not disrupted by noise.
Err 2	The pressure module has failed to respond to the request of the master controller.	The master controller will try to recover from the fault. If unsuccessful, replace the pressure module.
Err 3	Communication error in the daisy chain interface. This will only appear when the master controller is used in conjunction with a slave board.	Make sure the control cable used in the daisy chain interface is properly shielded from noise.
Err 4	The master controller has detected a change in module configuration or a fault in one of the modules.	Reinstall all modules in accordance with the instructions in the factory IOM.
Err 5	If the fault described in "Err 4" is not corrected, the master controller will reconfigure the modules that are responding properly and operate at a degraded condition.	Reinstall all modules. Contact factory if the problem persists.
Err 6	A message error affecting the software of the master controller or one of its modules.	Check the integrity of all connecting cables used to drive slave boards for additional solenoids. Also check the electrical grounding of the system installation.
Err 7	Indicates that one of the triac drivers are not functioning.	Return to factory for evaluation and repair.
Err 8	Internal Error.	Contact the factory.
Err 9	Unassigned message code.	Contact the factory.

5.0 Glossary of Terms

• **Run Mode:** The term used when the timer board is firing the solenoids.

• **Modules:** A major system component such as the DCT1000 master controller or a DCP100 pressure module.

• **Pressure Module:** The pressure measurement subsystem that includes the software and hardware for on-demand cleaning, alarms and signal retransmission of the process variable (i.e., the differential pressure across the dust bags).

• **Master Controller:** The primary timer board that contains all of the major features, connections for external inputs and power to drive the DCT1000 Dust Collector Timer Controller system.

• **Power Guard:** A plastic shield that covers the output triacs and other line voltage circuitry.

• **Demand Cycle Mode:** A process in which the run mode is enabled through the on-board pressure module or an external switch such as the Dwyer Photohelic®.

• **Euro Connector:** A "caged" connection used to terminate solenoids, incoming power, or external switches on the DCT1000.

• **Continuous Cycle Mode:** A time based cycling mode dependent on solenoid time on/off settings and time set between complete cycles.

• **Manual Override:** Allows the user to override the DCT1000 remotely or from the master controller panel through use of a switch or a wire jumper.

• **Slave Board:** A channel expander that is used in conjunction with the master controller to accommodate additional solenoids on larger dust collection systems. It can be recognized easily as it does not have the on-board display panel or the power supply present. A master controller may also be used as a slave board.

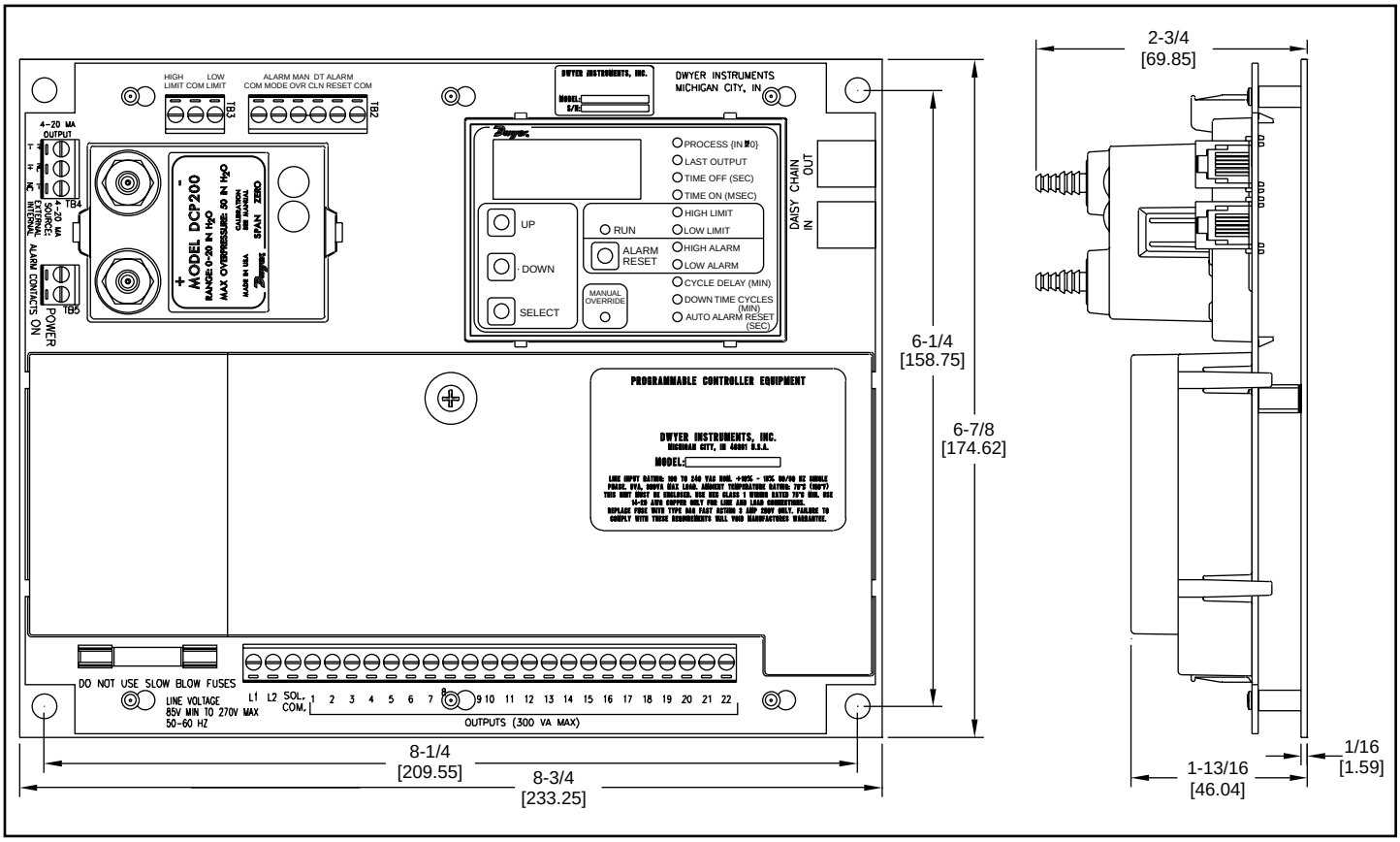

Figure 2 – Dimensional Specifications for the DCT1000
(shown with optional module DCP200)

Still need help? Please feel free to contact one of our customer service representatives at 219-879-8000 or visit us on the web at www.dwyer-inst.com or www.dust-controls.com. Again, we thank you for selecting the Dwyer DCT1000.

DWYER INSTRUMENTS, INC.
P.O. BOX 373 • MICHIGAN CITY, INDIANA 46361 U.S.A.

Phone: 219/879-8000 **www.dwyer-inst.com**
Fax: 219/872-9057 **e-mail: info@dwyer-inst.com**
Lit-by-Fax: 888/891-4963

CA & RCA 25 DD

GOYEN

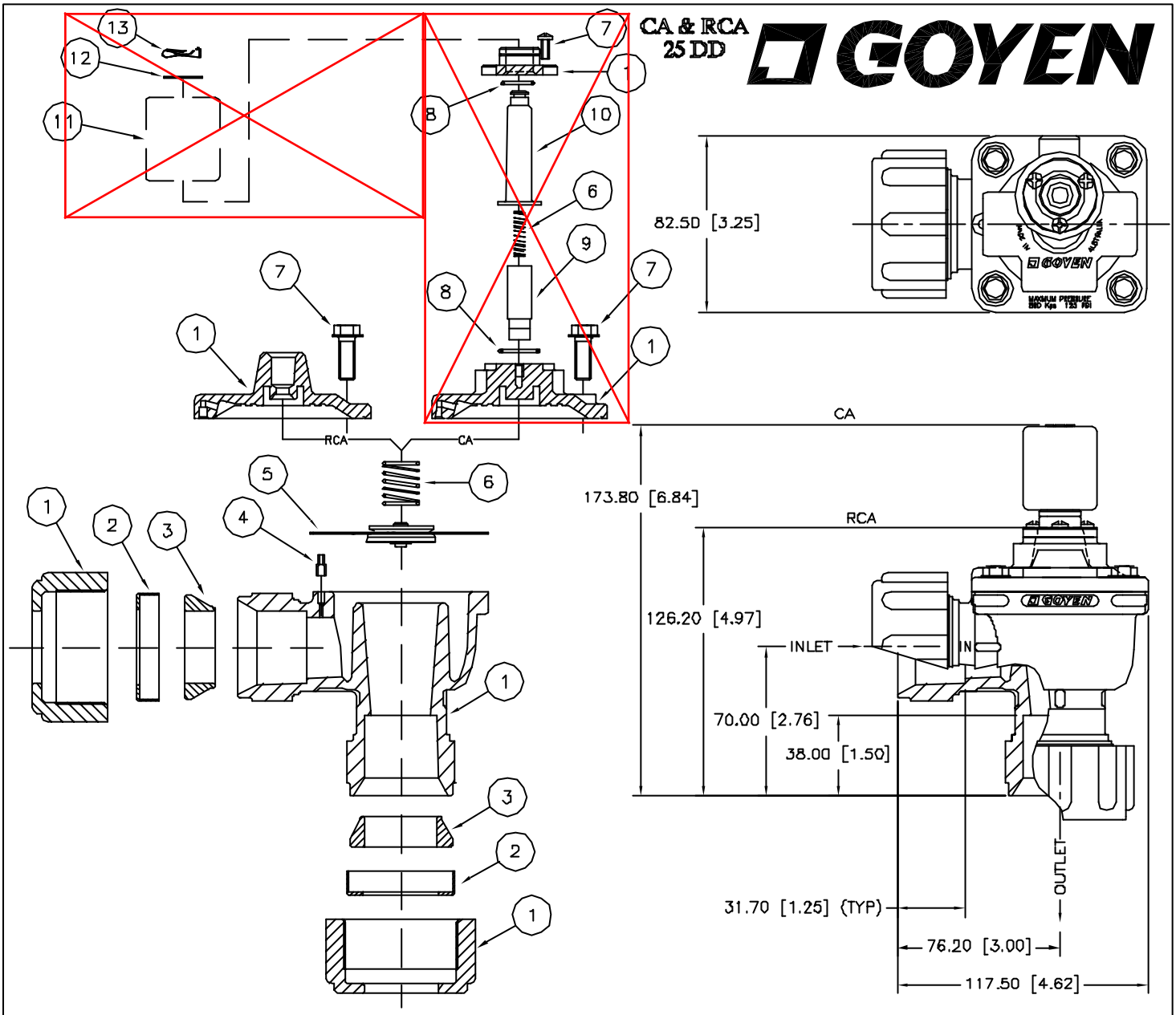

MECHANICAL DETAILS

No	DESCRIPTION	STANDARD MATERIAL	PORT OPTIONS	HIGH TEMP MATERIALS	KIT No STANDARD	KIT No HIGH TEMP
1	BODY,COVER,NUT	ALUM DIE CAST CA313	1" PIPE	AS STANDARD	–	–
2	SEAL RETAINER	M.S GALVABOND	N/A	AS STANDARD	K2508	K2507
3	SEAL	NITRILE	N/A	VITON	K2508	K2507
4	BLEED PIN	SPRUNG STEEL	N/A	AS STANDARD	–	–
5	DIAPHRAGM ASS'Y	BUNA N / NYLON	N/A	VITON	K2501	K2503
6	SPRING	304 STAINLESS STEEL	N/A	AS STANDARD	–	–
7	SCREW	304 STAINLESS STEEL	N/A	AS STANDARD	–	–
8	O' RING	BUNA N / NITRILE	N/A	VITON	–	–
9	PLUNGER ASS'Y	430 FR ST/STL	N/A	AS STANDARD	K0380	–
10	FERRULE/IRON TOP ASS'Y	305 STAINLESS STEEL	N/A	AS STANDARD	K0380	–
11	COILS	130° RATED NYLON ENCAPSULATION	QD –1/2 NPSC –M20x1.5	N/A	QR–K030–K0309 QD(M)–K0310–K0319 QD(N)–K0320–K0329	N/A
12	WASHER	PRESSED ALUMINIUM	N/A	AS STANDARD	–	–
13	CLIP	MECH PLATED STEEL	N/A	AS STANDARD	–	–

ELECTRICAL DETAILS

COIL VOLTAGE	200/240 VAC, 100/120 VAC, 24 VAC, 24 VDC, 12 VDC
COIL CONNECTION	QR – DIN CONNECTION QD CONDUIT ENTRY

WEIGHTS

UNIT WEIGHT	RCA = 0.990 Kg	CA = 1.210 Kg

DOC No	CAS_DG_25DD
REVISION No	2
ISSUE DATE	17.7.2002

CA & RCA 45 DD

GOYEN

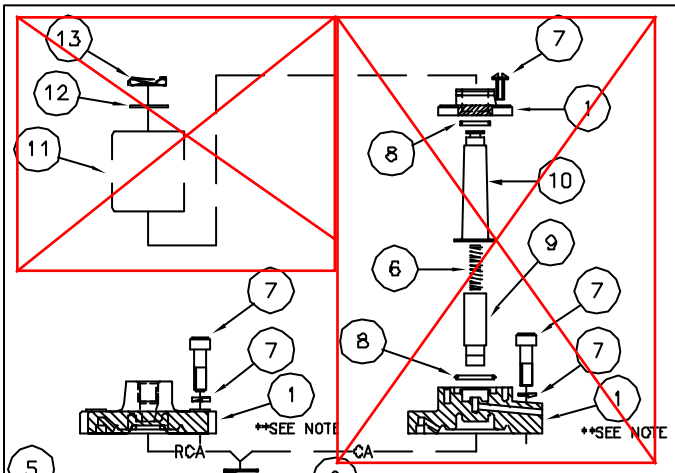

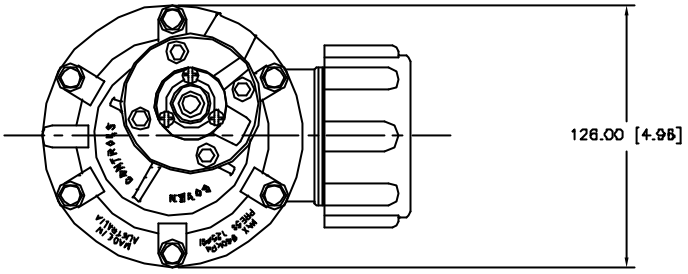

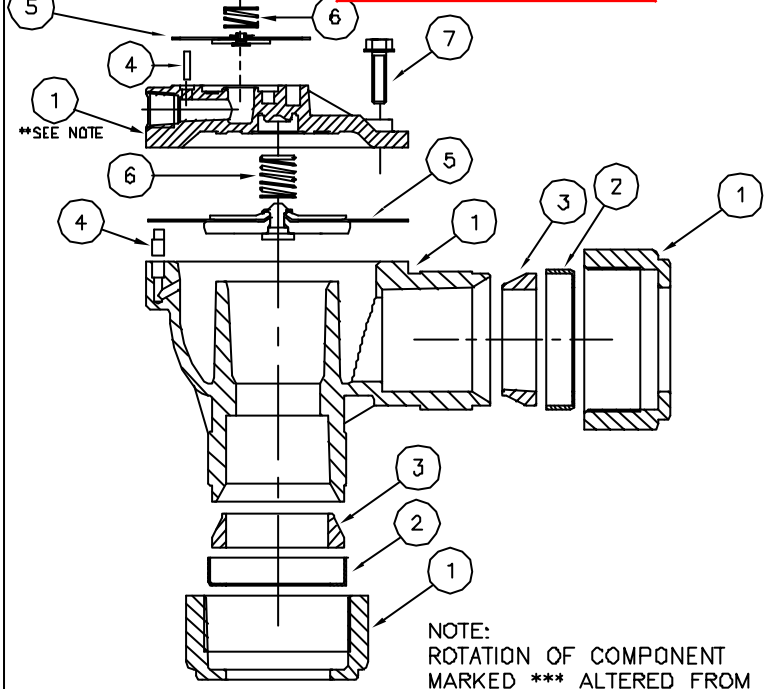

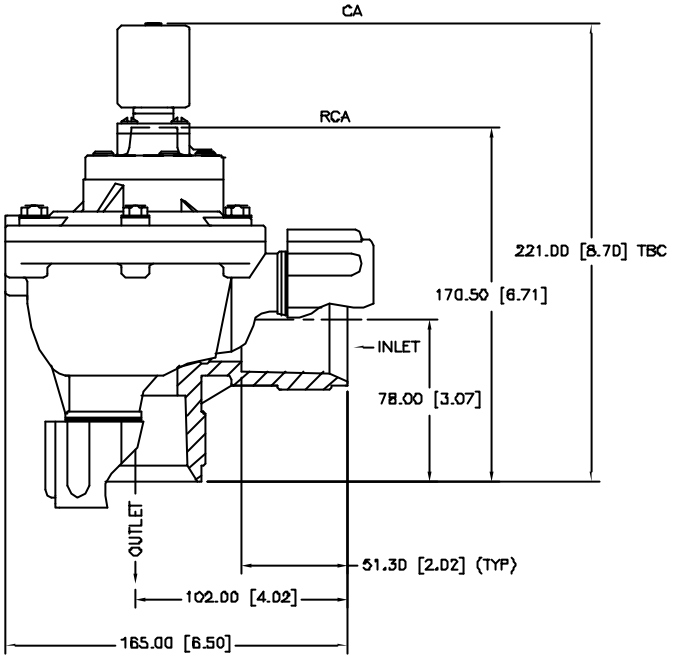

NOTE:
ROTATION OF COMPONENT MARKED *** ALTERED FROM FINAL ASSEMBLY POSITION FOR CLARITY OF CROSS SECTION

MECHANICAL DETAILS

No	DESCRIPTION	STANDARD MATERIAL	PORT OPTIONS	HIGH TEMP MATERIALS	KIT No STANDARD	KIT No HIGH TEMP
1	BODY,COVER,NUT	ALUM DIE CAST CA313	1 1/2" PIPE	AS STANDARD	–	–
2	SEAL RETAINER	M.S GALVABOND	N/A	AS STANDARD	K4510	K4511
3	SEAL	NITRILE	N/A	VITON	K4510	K4511
4	BLEED PIN	TURNED ALUMINIUM	N/A	AS STANDARD	–	–
5	DIAPHRAGM ASS'Y	BUNA N / NYLON	N/A	VITON	K4502	K4503
6	SPRING	304 STAINLESS STEEL	N/A	AS STANDARD	–	–
7	SCREW	304 STAINLESS STEEL	N/A	AS STANDARD	–	–
8	O' RING	BUNA N / NITRILE	N/A	VITON	–	–
9	PLUNGER ASS'Y	430 FR ST/STL	N/A	AS STANDARD	K0380	–
10	FERRULE/IRON TOP ASS'Y	305 STAINLESS STEEL	N/A	AS STANDARD	KD380	–
11	COILS	130° RATED NYLON ENCAPSULATION	QD –1/2 NPSC –M20x1.5	N/A	QR–K030–K0309 QD(M)–K0310–K0319 QD(N)–K0320–K0329	N/A
12	WASHER	PRESSED ALUMINIUM	N/A	AS STANDARD	–	–
13	CLIP	MECH PLATED STEEL	N/A	AS STANDARD	–	–

ELECTRICAL DETAILS

COIL VOLTAGE	200/240 VAC, 100/120 VAC, 24 VAC, 24 VDC, 12 VDC
COIL CONNECTION	QR – DIN CONNECTION QD CONDUIT ENTRY

WEIGHTS

UNIT WEIGHT	RCA = 2.110 Kg	CA = 2.280 Kg

DOC No	CAS_DG_45DD
REVISION No	2
ISSUE DATE	17.7.2002

CA & RCA 50 T

GOYEN

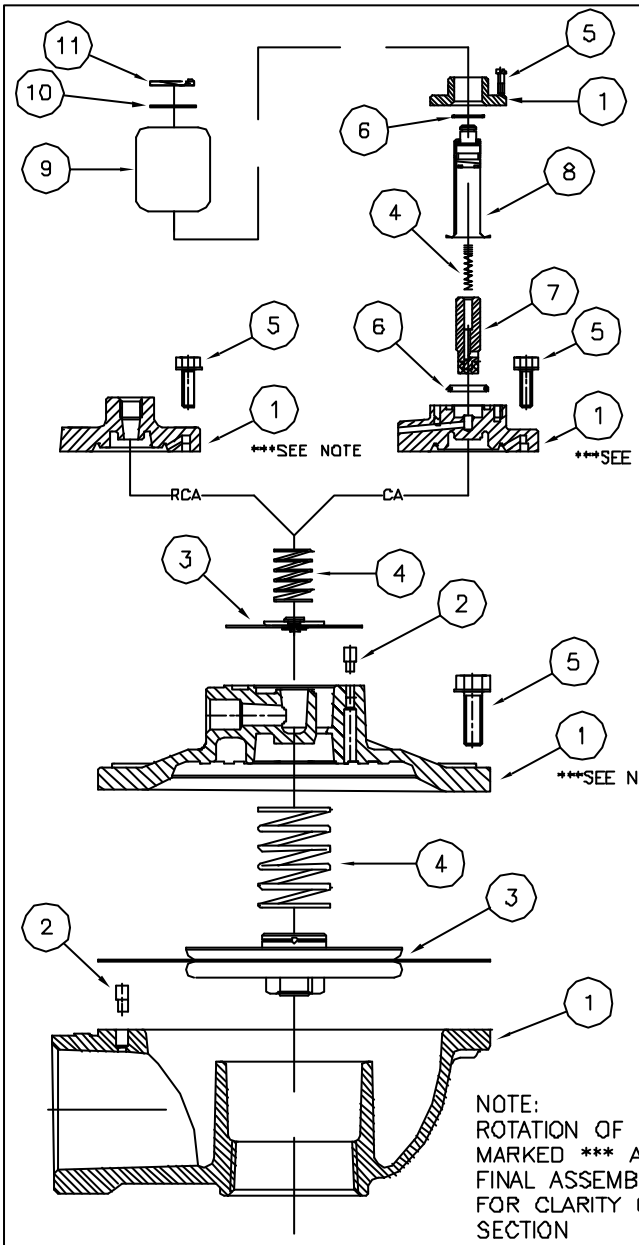

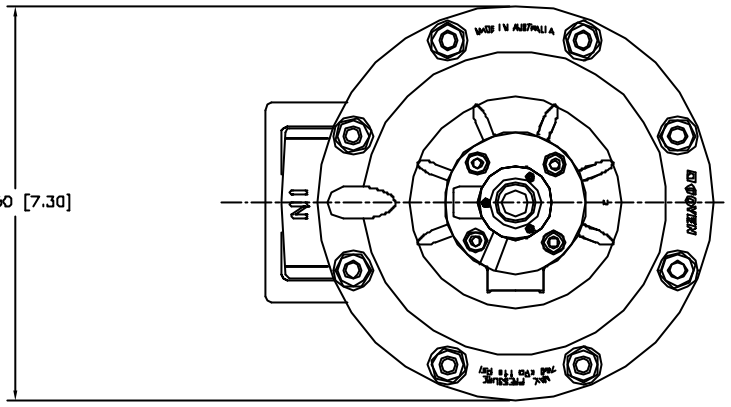

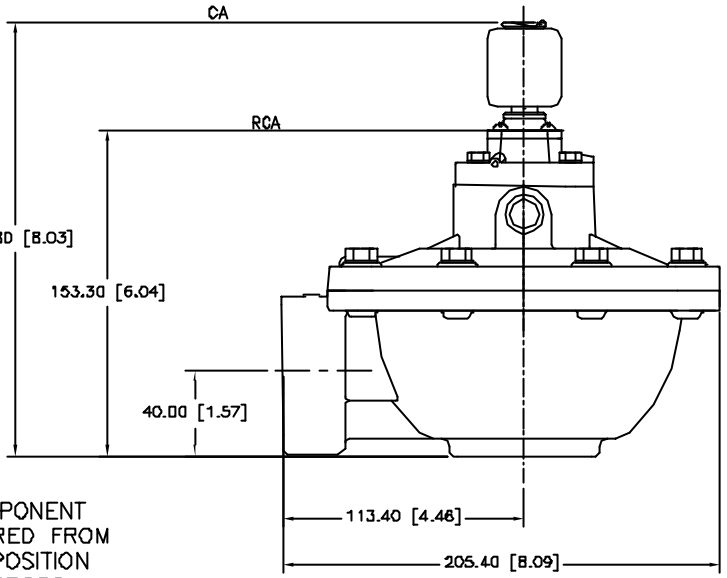

NOTE:
ROTATION OF COMPONENT MARKED *** ALTERED FROM FINAL ASSEMBLY POSITION FOR CLARITY OF CROSS SECTION

MECHANICAL DETAILS

No	DESCRIPTION	STANDARD MATERIAL	PORT OPTIONS	HI TEMP MATERIALS	KIT No STANDARD	KIT No HI TEMP
1	BODY & COVER	ALUMINIUM DIE CAST CA313	2" RC,G,NPT	AS STANDARD	–	–
2	BLEED PIN	TURNED ALUMINIUM	N/A	AS STANDARD	–	–
3	DIAPHRAGM ASS'Y	BUNA N / BUNA N RUBBER	N/A	VITON	K5004	K5000
4	SPRINGS	304 STAINLESS STEEL	N/A	AS STANDARD	–	–
5	SCREWS	304 STAINLESS STEEL	N/A	AS STANDARD	–	–
6	O' RINGS	BUNA N / NITRILE	N/A	VITON	–	–
7	PLUNGER ASS'Y	430 FR STAINLESS STEEL	N/A	AS STANDARD	K0380	–
8	FERRULE/IRON TOP ASS'Y	305 STAINLESS STEEL	N/A	AS STANDARD	K0380	–
9	COIL ARRGMNT.	130° RATED NYLON ENCAPSULATION	QD –1/2 NPSC –M20x1.5	N/A	QR–K030–K0309 QD(M)–K0310–K0319 QD(N)–K0320–K0329	N/A
10	WASHER	PRESSED ALUMINIUM	N/A	AS STANDARD	–	–
11	CLIP	MECHANICAL PLATED STEEL	N/A	AS STANDARD	–	–

ELECTRICAL DETAILS

COIL VOLTAGE	200/240 VAC, 100/120 VAC, 24 VAC, 24 VDC, 12 VDC
COIL CONNECTION	QR – DIN CONNECTION QD CONDUIT ENTRY

WEIGHTS

UNIT WEIGHT RCA = 2.684 Kg	CA = 2.895 Kg

DOC No	CAS_DG_50T
REVISION No	2
ISSUE DATE	17.7.2002

Section 6- Troubleshooting

Troubleshooting the Dust Collector

Excessive Pressure Drop Across Filter Cartridges

The differential pressure gauge or manometer on your dust collector should read 6” w.g. or less. Higher readings and/or steadily increasing readings are an indication that the main airflow through the dust collector may be restricted and a potential process problem such as poor suction at duct pickup points may exist. In extreme cases (over 17” w.g.) filter cartridges will be damaged. Check the following:

Pressure Gauge
Check the differential pressure gauge or manometer and the tubing leading to the dust collector for proper operation. Disconnect the lines at the gauge or manometer and clear with compressed air. Look for loose fittings, cracked, broken or pinched tubing. Make sure that the gauge is zeroed or that the manometer is level, zeroed and contains the correct fluid.

Compressed Air System
Inspect the compressed air system as follows to make sure that all of the filter cartridges are being cleaned:

If none of the solenoid valves are operating when the smart timer is in manual mode, check the timer using the “Troubleshooting the Timer” section.

Check the air pressure at the compressed air manifold. It should recover to 80-90 psig before each pulse. If not, check to make sure that the compressed air supply system is in good operating condition, correctly sized, and supply lines are not too small or restricted. Listen for the sound of compressed air flowing continuously through one or more diaphragm valves. This is an indication of a valve or valves “stuck” in the pulsing position. The usual causes for this condition are either a leak in the tubing between the solenoid and diaphragm valves or dirt in the solenoid and/or diaphragm valves.

Check to see that all solenoid valves are firing by putting the smart timer in manual mode and holding a finger over each solenoid exhaust port as described in the “Start Up Checklist” section.

CAMCORP, INC.
Phone: 913-831-0740 Fax: 913-831-9271
www.camcorpinc.com

Troubleshooting the Dust Collector (continued)

Filter Cartridges Loaded with Dust

This is a condition known as blinding. If the dust is dry see the next four paragraphs below. If the dust is wet see the paragraphs below on “Water Leaks” and “Condensation”.

Dust Not Discharging from the Hopper
Check hopper for over-loading or bridging across the dust discharge. Correct by repairing dust discharge equipment, replacing with higher capacity equipment, installing hopper vibrators, etc. as required to keep the hopper empty.

Air Flow Too High
If the main airflow is too high to allow dust to drop off of the filter cartridges, an excessive pressure drop across the dust collector will result and dust will build up in the system. In many cases this high pressure drop in turn leads to a reduction in the main air flow so that it is necessary to remove the dust accumulation from the filter cartridges (and the rest of the system) before measuring the main air flow volume.

Visually inspect the cartridges for packed material between the pleats. If packing is evident see the note below and take the necessary action to clean the cartridges. Next, measure the main airflow with a pitot tube or equivalent device and compare with the original volume for which the unit was designed. If the flow is too high, cut back the main fan to prevent a recurrence of the problem.

Particle Size and Dust Load
If possible, compare the dust particle size and loading with the original design specifications. Finer dust may cause a higher pressure drop. Do not hesitate to call CAMCORP as we have experience with many kinds of dust.

Water Leaks
Inspect the dust collector housing and ductwork for holes, cracks or loose gasketing where water could enter the collector.

CAMCORP, INC.
Phone: 913-831-0740 Fax: 913-831-9271
www.camcorpinc.com

Troubleshooting the Dust Collector (continued)

Condensation
If moisture has been condensing inside the collector check the dew point temperature of the incoming air stream. It may be necessary to insulate the collector and/or the ductwork leading to the collector to keep surface temperatures above the dew point and prevent condensation inside the dust collector.

NOTE: Collectors that have blinded cartridges can possibly be put into service by running the pulsing air system in manual mode for 15 to 30 minutes with a 10 second "off time" and without the main fan or blower running. If the pressure drop is not lower when the main fan is started again remove the filter cartridges from the collector and replace. Make sure the timer "off time" has been reset to specifications prior to re-start. Information pertaining to filter bag cleaning may be obtained by calling your CAMCORP sales representative.

Extremely Low Pressure Drop

Differential Pressure Tubing
Check the tubing between the dust collector and the pressure module, which is mounted on the smart timer circuit board for leaks or cracks.

Holes in Filter cartridges or Incorrectly Installed
Inspect the filter cartridges for holes, rips, tears or excessive wear. Assure that the filter cartridges were installed correctly according to the "Filter Cartridge Installation" section.

Ductwork and Dampers
Inspect the ductwork to and from the dust collector for air leaks or blockage. Assure that any dampers in the system are correctly positioned to allow for proper air flow through the dust collector.

Leaks in the Housing
Check the tube sheet (flat steel sheets from which the filter cartridges are suspended) and the dust collector housing for holes, cracks or loose gasketing that would permit air to bypass the dust collector or filter cartridges.

CAMCORP, INC.
Phone: 913-831-0740 Fax: 913-831-9271
www.camcorpinc.com

Troubleshooting the Dust Collector (continued)

Continuous Flow of Dust in the Clean Air Exhaust (Primary Dusting)

Holes in the tube sheets
Check the tube sheet for holes, cracks or loose bolts that would permit dusty air to bypass the filter cartridges.

Puff of dust in the clean air exhaust after each pulse (Secondary Dusting)

Compressed air manifold pressure too high
Check compressed air manifold pressure gauge. If the pulsing air pressure is over 100 psig the filter cartridges may flex excessively and allow fine dust to pass through the filter material.

Worn filter Cartridges
Inspect the filter cartridges for wear. Worn cartridges may not stop fine dust when flexed by a compressed air pulse.

Residual dust
If dust has migrated into the clean air plenum because of an improperly installed filter cartridge, torn filter cartridge or a hole in tube sheet, etc., the pulsing air may stir up the dust and allow it to escape into the clean air exhaust after each pulse. Residual dust may also be driven down inside the filter cartridges by the pulsing air. If the filter cartridges are filled with several inches of dust clean both the clean air plenum and the filter cartridges to avoid further problems.

Short Filter Cartridge Life

This is often a complicated problem to diagnose and we recommend calling the factory for advice. The following list may be helpful in performing some preliminary checks:

Temperature
Operating Temperature above the recommended limit of the filter cartridge material.

CAMCORP, INC.
Phone: 913-831-0740 Fax: 913-831-9271
www.camcorpinc.com

Troubleshooting the Dust Collector (continued)

Chemical attack
Filter material degrades due to attack from certain chemicals in the dust or gasses in the air stream.

High moisture
High moisture content in the collector may cause certain filter cartridge material to shrink, degrade (more rapidly at elevated temperatures) or blind off.

Localized abrasion
Abrasion of the filter cartridges where high velocity dusty air hits the filter cartridges. A dust impingement baffle may be required to be installed on the inlet of the dust collector.

Troubleshooting the Timer

Check for mechanical damage.

If the “Power On” indicator is not on, check for proper power input. The “hot” line connection must be connected to terminal “L1”, as this is the fused terminal.

Check for a blown fuse; if replacement is necessary, use only 3 AMP standard 3AG fuse (1-1/4” long). Do not use a slow-blow type fuse.

Check the wiring from the timer to the solenoids for open or short circuits.

After performing the steps above, if the timer is still not functioning properly (no output voltage, sequencing problems, etc.) please contact your CAMCORP representative.

CAMCORP, INC.
Phone: 913-831-0740 Fax: 913-831-9271
www.camcorpinc.com

Troubleshooting the Compressed Air System

Pulsing failure of all valves or the same numbered valve on each header

Pulse timer board inoperative
Check pulse timer board for 120 VAC pulse between each numbered terminal on timer board and solenoid common terminal. Repair or replace timer if necessary.

Open or short circuit in wiring between pulse timer board and solenoids
Check continuity with ohmmeter or suitable tester and repair as required.

Pulsing failure of valves at any location

Plastic plug in solenoid exhaust port
Remove and discard plug.

Ruptured diaphragm
Disassemble valve in question and inspect diaphragm(s). Replace with a repair kit if necessary.

Pinched or plugged tubing between solenoid and diaphragm valve.
Inspect tubing and replace if necessary.

Continuous passage of compressed air through one of more blowpipes

¼" O.D. tubing or fittings disconnected, leaking or broken.
Inspect and repair as required. Always use new ferrules in fittings when replacing copper tubing.

Diaphragm valve air bleed hole or passage restricted
Disassemble and inspect the diaphragm valve in question as follows:

- 1" valves – check for plugged air bleed passages in valve body and cover.
- 1 ½" valves – check for plugged or restricted air bleed passages.
- 2" valves – check for plugged or restricted air bleed passages.

CAMCORP, INC.
Phone: 913-831-0740 Fax: 913-831-9271
www.camcorpinc.com

Section 7 – Routine Maintenance

Inspection

Frequency will vary as widely as there are operating conditions. In general proceed as follows:

Daily – Check unit differential pressure.

Weekly – Check pulse timer board and solenoid valves for function. This usually is only listening to verify uniform time in intervals between blasts.

Monthly – Lubricate fan, rotary valve and screw conveyor. Check seals on latter two for dust loss.

Repairs

Filter cartridges – Generally replacement, although some applications can be laundered.

Solenoid Valves – Repair kits are available if a valve is stuck open or fails to operate.

Diaphragm Valves – Repair kits are available if a valve is stuck open or fails to operate due to a ruptured diaphragm.

Rotary Valves – Usually a matter of periodic seal and blade replacement. More detailed information is supplied with the valve.

Screw Conveyors – Periodic replacement of "V" belts and shaft seals. Inspect hanger bearings during filter bag change. Failure will be detected by the squeal.

Fans – "V" belt tension and replacement of bearings if running rough. Make sure rotor balance is maintained.

CAMCORP, INC.
Phone: 913-831-0740 Fax: 913-831-9271
www.camcorpinc.com

Section 8 – Appendix

Dust Collection Terms & Definitions

Air-to-Cloth Ratio – Ratio of the volume of gas filtered (in ACFM) to the amount of filter media (in square feet).

Cartridge Blinding – A condition where dust particles become embedded in the fabric over time and are not removed by the cleaning mechanism. This results in an increased pressure drop across the filter cartridge media.

Bleed Through – Small particles of dust that are able to migrate through the filter cartridges.

Bridging – A material blockage across an opening such as a hopper or between filter bags or cartridges.

Can Velocity – The upward velocity of air through a cross section of the dust collector.

Clean Air Plenum – The area of the dust collector where the air passes through after being filtered by the filter media.

Diaphragm Valve – A compressed air valve that provides a volume of high-pressure air to clean the filter media.

Differential Pressure – The variance in pressure between two measured points. On a dust collector this is generally measured on each side of the tube sheet to indicate the condition of the filter cartridges. This is typically measured in inches of water.

Dirty Air Plenum – The area of the dust collector where the filter media hangs and the air has dust particulate in it.

Dust Cake – The normal build up on the outside of the filter media. A dust cake is needed to provide the maximum filtering efficiency.

Filter Media – An air permeable material that provides a means to separate the particulate from the air. This is usually a pleated cartridge.

Inches of Water – The standard unit of measurement for dust collector differential pressure. A typical notation is 2” w.c. (water column) or 2” w.g. (water gauge).

CAMCORP, INC.
Phone: 913-831-0740 Fax: 913-831-9271
www.camcorpinc.com

Pressure Drop – Another term for differential pressure or the drop in pressure between two measured points.

Re-Entrainment – The re-depositing of dust on the filter media after it has been cleaned off. This can be caused by turbulence in the hopper (or dirty air plenum) or by excessive airflow through the dust collector.

Solenoid Valve – In the case of a dust collector, a solenoid valve is used to open and close a diaphragm valve. It does this by venting compressed air from the backside of the diaphragm which allows the diaphragm to open.

Smart Timer Board – A timer that senses the differential pressure and only cleans (pulses) the filter media when differential pressure is high (when the bags / cartridges are dirty). This provides for more economical use of compressed air. The Smart Timer also provides additional features not available on a standard timer. See Section 5 on Smart Timers for more details.

Tubesheet – The steel plate that supports the filter media (bags or cartridges). This plate separates the dirty air plenum from the clean air plenum.

CAMCORP, INC.
Phone: 913-831-0740 Fax: 913-831-9271
www.camcorpinc.com